ELTA SELECT

Compact SCP

Product Brochure

t: **01384 275800**
f: **01384 275810**
e: **bs@eltafans.co.uk**
visit: **eltaselect.com**

Compact SCP

Plate Mounted Axial Flow Fan

NEW IMPELLER

axial

OVERVIEW

The Compact SCP features our new high efficiency impeller. The fan design, construction and finish provides a strong durable and weatherproofed range. Compact SCP fans boast highly efficient lightweight, robust motors, with proven reliability; ensuring long life and trouble free operation and excellent all round performance and simple speed control.

MORE INFORMATION

AC

		PAGE NO.
Performance, SFP & Electrical Data	1Ph	3
	3Ph	4
Sound Data	1Ph	3
	3Ph	5
Accessories & Wiring Data	All	6
Optimum Energy Efficiency Point	All	7
Dimensional Data	All	7

QUICK FACTS

- ✓ 9 standard sizes from 315mm to 800mm.
- ✓ Air volume flow rates up to 6.069 m^3/s.
- ✓ Static pressures up to 242 Pa.
- ✓ Highly efficient, lightweight induction motors.
- ✓ Fully speed controllable.

CASING

The all metal fan casing and guard provide a long lasting and robust construction.

The units have been constructed from mild steel and suitably treated to ensure full corrosion protection. The guard shall be bright zinc plated. Fan plates and motors shall have a powder coated polyester epoxy paint finish in pastel beige (RAL 7032).

IMPELLER

Adjustable pitch aerofoil impellers are provided with blades made from high quality GRP.

Impellers are factory set at an angle to provide maximum performance. The hubs are manufactured from die cast aluminium alloy (LM24).

Assembled impellers are to be dynamically balanced to ISO 14694 Grade G6.3.

MOTORS

Three phase multi-voltage motors are wound for either (Delta) 230V/3Ph/50Hz or (Star) 400V/3Ph/50Hz connection, suitable for speed control when used with the Eltadrive VSD range of frequency inverter controls.

Fans are suitable for operating temperatures between -20°C and +70°C fixed speed and -20°C and +50°C when used with a speed controller. Electrical connection to the motor shall be provided by an IP55 terminal box fitted to a 550mm long flying lead.

QUALITY MANAGEMENT

Units are to be designed and manufactured with procedures as defined in BS EN ISO 9001:2008.

All SCP units are to be tested to ISO 5801:2007 (airside performance) and BS 848 Part 2:1985 (sound performance).

TYPICAL APPLICATIONS

- Factories
- Sports Halls
- Shops
- Industrial Units
- Warehousing
- Schools
- Kitchens

Elta Fans Limited has a policy of continuous product development and improvement and therefore reserves the right to supply products which may differ from those illustrated and described in this publication. Confirmation of dimensions and data will be supplied on request.

Compact SCP

Performance, SFP & Electrical Data

AC

SINGLE Phase - 220V to 240V / 50Hz

Product Code	Speed r/min	Airflow SFP	Airflow m³/s @ Static Pressure Pa.						Overall Efficiency %	FMEG	Motor Electrical Data		dBA @ 3m	
			0	25	50	75	100	150			FLC Amps	Input kW		
SCP400/4-1AC	1375	**m³ / s**	**1.377**	**1.282**	**1.184**	**1.054**	**0.907**		26.8	N36	1.80	0.350	Inlet	50
		W / (L/s)	0.23	0.25	0.28	0.32	0.38						Outlet	54
SCP450/4-1AC	1315	**m³ / s**	**1.782**	**1.649**	**1.510**	**1.349**	**1.167**		28.7	N37	1.80	0.420	Inlet	52
		W / (L/s)	0.22	0.24	0.27	0.31	0.36						Outlet	57
SCP500/4-1AC	1355	**m³ / s**	**2.542**	**2.423**	**2.296**	**2.143**	**1.953**	**1.493**	30.2	N37	3.60	0.750	Inlet	56
		W / (L/s)	0.28	0.30	0.32	0.35	0.38	0.50					Outlet	60
SCP560/4-1AC	1315	**m³ / s**	**3.349**	**3.198**	**3.029**	**2.840**	**2.625**	**2.080**	34.4	N41	4.90	0.930	Inlet	58
		W / (L/s)	0.26	0.28	0.30	0.32	0.35	0.44					Outlet	62
SCP630/4-1AC	1295	**m³ / s**	**4.776**	**4.586**	**4.376**	**4.150**	**3.903**	**3.289**	34.8	N40	6.50	1.480	Inlet	63
		W / (L/s)	0.29	0.31	0.33	0.35	0.38	0.45					Outlet	65

Overall total efficiency, r/min and FMEG values are per ISO 12759 installation category D. FLC Amps @ 230V / 1Ph / 50Hz.
Data provided at standard air density of 1.2 kg/m³.
The overall A-weighted sound pressure level is at a distance of 3m with spherical free-field propagation. It is expressed in dB re-20μPa and is presented for comparative purposes only.

Sound Data

SINGLE Phase - 220V to 240V / 50Hz

Product Code		Sound Power Level dBW @ Octave Band Hz								Total dB
		63Hz	125Hz	250Hz	500Hz	1 kHz	2 kHz	4 kHz	8 kHz	
SCP400/4-1AC	Inlet	-	-	-	-	-	-	-	-	-
	Outlet	-	-	-	-	-	-	-	-	-
SCP450/4-1AC	Inlet	-	-	-	-	-	-	-	-	-
	Outlet	-	-	-	-	-	-	-	-	-
SCP500/4-1AC	Inlet	-	-	-	-	-	-	-	-	-
	Outlet	-	-	-	-	-	-	-	-	-
SCP560/4-1AC	Inlet	-	-	-	-	-	-	-	-	-
	Outlet	-	-	-	-	-	-	-	-	-
SCP630/4-1AC	Inlet	-	-	-	-	-	-	-	-	-
	Outlet	-	-	-	-	-	-	-	-	-

Please contact Elta Fans for sound data.

Tests and preparation of the sound data have been carried out in accordance with BS 848 Part 2:1985 at 50% peak pressure.
The Sound Power Level Spectra are in dB re-1pW.

Elta Fans Limited has a policy of continuous product development and improvement and therefore reserves the right to supply products which may differ from those illustrated and described in this publication.
Confirmation of dimensions and data will be supplied on request.

Compact SCP

Performance, SFP & Electrical Data

AC

THREE Phase - 380V to 415V / 50Hz

	Product Code	Speed r/min	Airflow SFP	Airflow m³/s @ Static Pressure Pa.								Overall Efficiency %	FMEG	Motor Electrical Data			dBA @ 3m	
				0	25	50	75	100	150	200	250			FLC Amps	Input kW	Δ / Y		
NEW MODELS	SCP315/4-3AC	1360	m³ / s	0.704	0.647	0.567	0.465					24.7	N36	0.42	0.150	-	Inlet	-
			W / (L/s)	0.18	0.21	0.25	0.31										Outlet	-
NEW MODELS	SCP350/4-3AC	1305	m³ / s	0.946	0.869	0.772	0.639					25.8	N36	0.42	0.200	-	Inlet	-
			W / (L/s)	0.19	0.21	0.25	0.30										Outlet	-
	SCP400/4-3AC	1400	m³ / s	1.455	1.375	1.268	1.133	0.988				31.5	N40	0.68	0.330	-	Inlet	51
			W / (L/s)	0.21	0.23	0.25	0.29	0.34									Outlet	55
	SCP450/4-3AC	1390	m³ / s	1.705	1.589	1.466	1.329	1.167				32.6	N41	0.68	0.380	-	Inlet	53
			W / (L/s)	0.19	0.21	0.24	0.27	0.32									Outlet	58
NEW MODEL	SCP450/4B-3AC	1375	m³ / s	2.081	1.976	1.863	1.712	1.535				33.3	N41	0.96	0.520	-	Inlet	53
			W / (L/s)	0.24	0.25	0.27	0.30	0.34									Outlet	58
	SCP500/4-3AC	1405	m³ / s	2.639	2.525	2.394	2.245	2.075	1.646			34.5	N41	1.35	0.730	-	Inlet	57
			W / (L/s)	0.26	0.27	0.29	0.32	0.35	0.44								Outlet	61
	SCP500/6-3AC	930	m³ / s	1.518	1.339	1.102						29.3	N40	0.94	0.200	-	Inlet	50
			W / (L/s)	0.12	0.15	0.18											Outlet	52
	SCP560/4-3AC	1410	m³ / s	3.443	3.322	3.185	3.029	2.851	2.412			38.9	N45	1.90	0.970	-	Inlet	60
			W / (L/s)	0.25	0.27	0.29	0.31	0.33	0.40								Outlet	64
	SCP560/6-3AC	880	m³ / s	2.162	1.924	1.616	1.159					30.7	N40	0.94	0.290	-	Inlet	54
			W / (L/s)	0.12	0.15	0.18	0.25										Outlet	56
	SCP630/4-3AC	1420	m³ / s	4.590	4.437	4.271	4.096	3.914	3.502	2.881		42.5	N48	2.70	1.370	-	Inlet	65
			W / (L/s)	0.26	0.28	0.30	0.32	0.34	0.39	0.47							Outlet	67
	SCP630/6-3AC	915	m³ / s	3.399	3.185	2.958	2.672	2.273				32.7	N40	2.00	0.710	-	Inlet	55
			W / (L/s)	0.19	0.21	0.23	0.27	0.31									Outlet	57
	SCP710/4/6-3AC	1240	m³ / s	6.069	5.807	5.550	5.291	5.027	4.460	3.793		34.4	N38	4.30	2.250	3Ph Δ	Inlet	65
			W / (L/s)	0.35	0.37	0.39	0.41	0.44	0.50	0.59							Outlet	67
		930	m³ / s	4.455	4.171	3.842	3.467	3.048				24.2		2.88	1.340	3Ph Y	Inlet	57
			W / (L/s)	0.29	0.31	0.34	0.38	0.44									Outlet	58
	SCP710/6/8-3AC	890	m³ / s	4.542	4.272	3.972	3.615	3.150				31.8	N38	3.40	1.040	3Ph Δ	Inlet	56
			W / (L/s)	0.22	0.24	0.26	0.29	0.33									Outlet	58
		710	m³ / s	3.635	3.287	2.805	2.181					24.6		1.50	0.680	3Ph Y	Inlet	52
			W / (L/s)	0.18	0.20	0.24	0.31										Outlet	54
	SCP800/6/8-3AC	855	m³ / s	5.618	5.232	4.833	4.394	3.869				31.9	N37	3.40	1.280	3Ph Δ	Inlet	60
			W / (L/s)	0.22	0.24	0.27	0.29	0.33									Outlet	63
		635	m³ / s	4.184	3.643	3.025	2.075					22.0		1.50	0.750	3Ph Y	Inlet	51
			W / (L/s)	0.17	0.20	0.25	0.36										Outlet	53

Overall static efficiency, r/min and FMEG values are per ISO 12759 installation category A. FLC Amps @ 400V / 3Ph / 50Hz.

Data provided at standard air density of 1.2 kg/m³.
The overall A-weighted sound pressure level is at a distance of 3m with spherical free-field propagation. It is expressed in dB re-20μPa and is presented for comparative purposes only.

Elta Fans Limited has a policy of continuous product development and improvement and therefore reserves the right to supply products which may differ from those illustrated and described in this publication. Confirmation of dimensions and data will be supplied on request.

Compact SCP

Sound Data

AC

THREE Phase - 380V to 415V / 50Hz

Product Code	Speed r/min		Sound Power Level dBW @ Octave Band Hz								Total dB
			63Hz	125Hz	250Hz	500Hz	1 kHz	2 kHz	4 kHz	8 kHz	
SCP315/4-3AC	1360	Inlet	-	-	-	-	-	-	-	-	-
		Outlet	-	-	-	-	-	-	-	-	-
SCP350/4-3AC	1305	Inlet	-	-	-	-	-	-	-	-	-
		Outlet	-	-	-	-	-	-	-	-	-
SCP400/4-3AC	1400	Inlet	-	-	-	-	-	-	-	-	-
		Outlet	-	-	-	-	-	-	-	-	-
SCP450/4-3AC	1390	Inlet	-	-	-	-	-	-	-	-	-
		Outlet	-	-	-	-	-	-	-	-	-
SCP450/4B-3AC	1375	Inlet	-	-	-	-	-	-	-	-	-
		Outlet	-	-	-	-	-	-	-	-	-
SCP500/4-3AC	1405	Inlet	-	-	-	-	-	-	-	-	-
		Outlet	-	-	-	-	-	-	-	-	-
SCP500/6-3AC	930	Inlet	-	-	-	-	-	-	-	-	-
		Outlet	-	-	-	-	-	-	-	-	-
SCP560/4-3AC	1410	Inlet	-	-	-	-	-	-	-	-	-
		Outlet	-	-	-	-	-	-	-	-	-
SCP560/6-3AC	880	Inlet	-	-	-	-	-	-	-	-	-
		Outlet	-	-	-	-	-	-	-	-	-
SCP630/4-3AC	1420	Inlet	-	-	-	-	-	-	-	-	-
		Outlet	-	-	-	-	-	-	-	-	-
SCP630/6-3AC	915	Inlet	-	-	-	-	-	-	-	-	-
		Outlet	-	-	-	-	-	-	-	-	-
SCP710/4/6-3AC	1240	Inlet	-	-	-	-	-	-	-	-	-
		Outlet	-	-	-	-	-	-	-	-	-
	930	Inlet	-	-	-	-	-	-	-	-	-
		Outlet	-	-	-	-	-	-	-	-	-
SCP710/6/8-3AC	890	Inlet	-	-	-	-	-	-	-	-	-
		Outlet	-	-	-	-	-	-	-	-	-
	710	Inlet	-	-	-	-	-	-	-	-	-
		Outlet	-	-	-	-	-	-	-	-	-
SCP800/6/8-3AC	855	Inlet	-	-	-	-	-	-	-	-	-
		Outlet	-	-	-	-	-	-	-	-	-
	635	Inlet	-	-	-	-	-	-	-	-	-
		Outlet	-	-	-	-	-	-	-	-	-

Please contact Elta Fans for sound data.

Tests and preparation of the sound data have been carried out in accordance with BS 848 Part 2:1985 at 50% peak pressure.
The Sound Power Level Spectra are in dB re-1pW.

Elta Fans Limited has a policy of continuous product development and improvement and therefore reserves the right to supply products which may differ from those illustrated and described in this publication.
Confirmation of dimensions and data will be supplied on request.

Compact SCP

Accessories & Wiring Data

AC

For more information on Accessories & Wiring Diagrams, please see individual product downloads, or visit eltaselect.com/information-centre

SINGLE Phase - 220V to 240V / 50Hz

Product Code	Electronic Controller	Transformer Controller	Louvre Shutter	Impeller Side Guard	Wall Cowl	Wiring Diagram No.
SCP400/4-1AC	149-EL31TK	149-TC14	064-0400-C	078C-0400-C	SWC35/40	152-500
SCP450/4-1AC	149-EL31TK	149-TC14	064-0450-C	078C-0450-C	SWC45/50	152-500
SCP500/4-1AC	149-EL61TK	149-TC18	064-0500-C	078C-0500-C	SWC45/50	152-500
SCP560/4-1AC	149-EL61TK	149-TC18	064-0560-C	078C-0560-C	SWC56/63	152-500
SCP630/4-1AC	-	149-TC110	064-0630-C	078C-0630-C	SWC56/63	152-500

THREE Phase - 380V to 415V / 50Hz

Product Code	Transformer Controller	Inverter Controller 1PH-3PH IP55	Inverter Controller 1PH-3PH IP20	Inverter Controller 3PH-3PH IP55	Inverter Controller 3PH-3PH IP20
SCP315/4-3AC	149-TC33	149-ODE-2-12037-1KB1S	149-ODE-2-12037-1KB12	149-ODE-2-14075-3KA1S	149-ODE-2-14075-3KA12
SCP350/4-3AC	149-TC33	149-ODE-2-12037-1KB1S	149-ODE-2-12037-1KB12	149-ODE-2-14075-3KA1S	149-ODE-2-14075-3KA12
SCP400/4-3AC	149-TC33	149-ODE-2-12037-3KA1S	149-ODE-2-12037-1KB12	149-ODE-2-14075-3KA1S	149-ODE-2-14075-3KA12
SCP450/4-3AC	149-TC33	149-ODE-2-12037-3KA1S	149-ODE-2-12037-1KB12	149-ODE-2-14075-3KA1S	149-ODE-2-14075-3KA12
SCP450/4B-3AC	149-TC33	149-ODE-2-12037-1KB1S	149-ODE-2-12037-1KB12	149-ODE-2-14075-3KA1S	149-ODE-2-14075-3KA12
SCP500/4-3AC	149-TC33	149-ODE-2-14075-3KA1S	149-ODE-2-12075-1KB12	149-ODE-2-14075-3KA1S	149-ODE-2-14075-3KA12
SCP500/6-3AC	149-TC33	-	-	149-ODE-2-14075-3KA1S	149-ODE-2-14075-3KA12
SCP560/4-3AC	149-TC35	149-ODE-2-14075-3KA1S	149-ODE-2-12075-1KB12	149-ODE-2-14075-3KA1S	149-ODE-2-14075-3KA12
SCP560/6-3AC	149-TC33	-	-	149-ODE-2-14075-3KA1S	149-ODE-2-14075-3KA12
SCP630/4-3AC	149-TC35	149-ODE-2-14075-3KA1S	149-ODE-2-12150-1KB12	149-ODE-2-14150-3KA1S	149-ODE-2-14150-3KA1
SCP630/6-3AC	149-TC35	-	-	149-ODE-2-14075-3KA1S	149-ODE-2-14075-3KA12
SCP710/4/6-3AC	149-TC35	-	-	149-ODE-2-24220-3KA4S	149-ODE-2-24220-3KA42
SCP710/6/8-3AC	149-TC33	-	-	149-ODE-2-14075-3KA1S	149-ODE-2-14075-3KA12
SCP800/6/8-3AC	149-TC33	-	-	149-ODE-2-14075-3KA1S	149-ODE-2-14075-3KA12

Product Code	Louvre Shutter	Impeller Side Guard	Wall Cowl	Wiring Diagram No.
SCP315/4-3AC	064-0315-C	078C-0315-C	SWC31/35	152-611
SCP350/4-3AC	064-0350-C	078C-0350-C	SWC31/35	152-611
SCP400/4-3AC	064-0400-C	078C-0400-C	SWC35/40	152-611
SCP450/4-3AC	064-0450-C	078C-0450-C	SWC45/50	152-611
SCP450/4B-3AC	064-0450-C	078C-0450-C	SWC45/50	152-611
SCP500/4-3AC	064-0500-C	078C-0500-C	SWC45/50	152-611
SCP500/6-3AC	064-0500-C	078C-0500-C	SWC45/50	152-608
SCP560/4-3AC	064-0560-C	078C-0560-C	SWC56/63	152-611
SCP560/6-3AC	064-0560-C	078C-0560-C	SWC56/63	152-608
SCP630/4-3AC	064-0630-C	078C-0630-C	SWC56/63	152-611
SCP630/6-3AC	064-0630-C	078C-0630-C	SWC56/63	152-608
SCP710/4/6-3AC	064-0710-C	078C-0710-C	-	152-614
SCP710/6/8-3AC	064-0710-C	078C-0710-C	-	152-614
SCP800/6/8-3AC	064-0800-C	078C-0800-C	-	152-614

Elta Fans Limited has a policy of continuous product development and improvement and therefore reserves the right to supply products which may differ from those illustrated and described in this publication. Confirmation of dimensions and data will be supplied on request.

Compact SCP

Optimum Energy Efficiency Point

AC

SINGLE Phase - 220V to 240V / 50Hz

Product Code	Volume m³/s	Pressue Pa	Input kW	Speed r/min	Efficiency %	FMEG
SCP400/4-1AC	0.829	112	0.346	1375	26.8	N36
SCP450/4-1AC	1.036	116	0.418	1315	28.7	N37
SCP500/4-1AC	1.540	147	0.746	1355	30.2	N37
SCP560/4-1AC	1.980	157	0.904	1315	34.4	N41
SCP630/4-1AC	2.933	171	1.446	1295	34.8	N40

Data provided at standard air density of 1.2 kg/m³.
Values are per ISO 12759 installation category A (static).

THREE Phase - 380V to 415V / 50Hz

Product Code	Volume m³/s	Pressue Pa	Input kW	Speed r/min	Efficiency %	FMEG
SCP315/4-3AC	0.410	88	0.146	1360	24.7	N36
SCP350/4-3AC	0.564	90	0.196	1305	25.8	N36
SCP400/4-3AC	0.827	125	0.328	1400	31.5	N40
SCP450/4-3AC	0.945	129	0.373	1390	32.6	N41
SCP450/4B-3AC	1.261	137	0.519	1375	33.3	N41
SCP500/4-3AC	1.570	157	0.715	1405	34.5	N41
SCP500/6-3AC	0.915	65	0.204	930	29.3	N40
SCP560/4-3AC	2.044	181	0.951	1410	38.9	N45
SCP560/6-3AC	1.290	69	0.292	880	30.7	N40
SCP630/4-3AC	2.880	200	1.356	1420	42.5	N48
SCP630/6-3AC	2.063	111	0.698	915	32.7	N40
SCP710/4/6-3AC	3.373	226	2.219	1240	34.4	N38
SCP710/6/8-3AC	2.780	116	1.012	890	31.8	N38
SCP800/6/8-3AC	3.370	118	1.249	855	31.9	N37

Dimensional Data

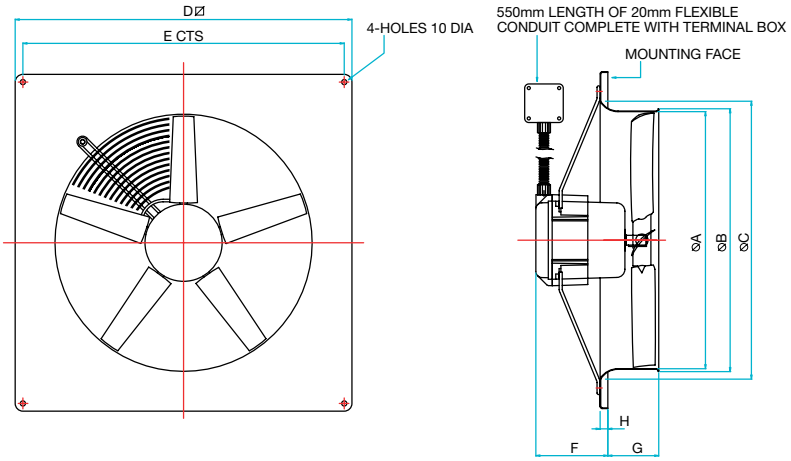

Product Code	A	B	C	D	E	F	G	H	Weight kg	
									1PH	3PH
SCP315	315	325	360	430	380	95	75	15	-	10
SCP350	350	360	395	485	435	95	75	15	-	10
SCP400	400	410	450	540	490	84	99	15	13	13
SCP450	450	460	500	575	535	87	99	15	14	14
SCP500	500	510	560	655	615	140	99	15	20	20
SCP560	560	575	625	725	670	140	99	20	24	24
SCP630	630	645	705	805	750	140	101	20	24	30
SCP710	710	725	765	850	810	146	101	27	-	30
SCP800	800	820	870	970	910	146	101	27	-	36

All dimensions are expressed in mm.

Elta Fans Limited has a policy of continuous product development and improvement and therefore reserves the right to supply products which may differ from those illustrated and described in this publication. Confirmation of dimensions and data will be supplied on request.

BUILDING SERVICES

Tel: +44 (0) 1384 275800
Fax: +44 (0) 1384 275810
e-mail: bs@eltafans.co.uk

46 Third Avenue
Pensnett Trading Estate
Kingswinford, West Midlands
DY6 7US, United Kingdom

APPLIED TECHNOLOGY

Tel: +44 (0) 1489 566500
Fax: +44 (0) 1489 566555
e-mail: at@eltafans.co.uk

17 Barnes Wallis Road
Segensworth East Industrial Estate
Fareham, Hampshire
PO15 5ST, United Kingdom

EXPORT

Tel: +44 (0) 1489 566500
Fax: +44 (0) 1489 566555
e-mail: export@eltafans.co.uk

17 Barnes Wallis Road
Segensworth East Industrial Estate
Fareham, Hampshire
PO15 5ST, United Kingdom

www.eltafans.com

BS EN ISO 9001:2008
FM 556465

A member of
HEVAC ASSOCIATION

CIBSE
PATRONS

A member of ELTA GROUP LIMITED