ELTA SELECT

Miniflow SAMF

Product Brochure

t: **01384 275800**
f: **01384 275810**
e: **bs@eltafans.co.uk**
visit: **eltaselect.com**

Miniflow SAMF

Cased Axial Fan

axial

OVERVIEW

The Miniflow SAMF is a duct mounted axial fan with a lightweight, yet robust, design. Specifically developed as a cost effective alternative to in-line centrifugal fans, it provides powerful airflow at lower pressures for applications ranging from domestic to commercial ventilation.

MORE INFORMATION	AC PAGE NO.
Performance, SFP & Electrical Data	3
Sound Data	3
Accessories & Wiring Data	4
Optimum Energy Efficiency Point	4
Dimensional Data	5

QUICK FACTS

- ✓ 4 standard sizes from 150mm to 315mm.
- ✓ Air volume flow rates up to 0.55 m³/s.
- ✓ Static pressures up to 150 Pa.
- ✓ Suitable for operating temperatures up to +50°C.
- ✓ Extensive stock range available.

CASING

The all metal fan casing provides a long lasting and robust construction.

The units have been constructed from mild steel, with mounting brackets as an integral component. Both motors and axial impellers mounted within the length of the unit casing.

All casing parts shall have a powder coated finish after manufacture, except the SAMF150/2-2 which has a die cast aluminium housing.

IMPELLER

The impeller is aerodynamically designed by combining the impeller with the rotor of the external rotor motor. Motor and impeller are balanced to ISO 14694 Grade G6.3.

MOTORS

External rotor motor, with sealed for life ball bearings, allowing the unit to be mounted at any angle. Motors shall be IP44 protected and Class 'B' insulation.

All units are suitable for a maximum of 80% R.H. and ambient operating temperatures up to +50°C.

Motors are wound for 220v to 240v/1Ph/50Hz AC supply, with built in thermal overload protection, except the SAMF150/2-2 which is impedance protected.

QUALITY MANAGEMENT

Units are to be designed and manufactured with procedures as defined in BS EN ISO 9001:2008. All SAMF units are to be tested to ISO 5801:2007 (airside performance) and BS 848 Part 2:1985 (sound performance).

TYPICAL APPLICATIONS

- Small commercial premises
- Kitchens (where there is not an outside wall to terminate a wall fan)

Elta Fans Limited has a policy of continuous product development and improvement and therefore reserves the right to supply products which may differ from those illustrated and described in this publication. Confirmation of dimensions and data will be supplied on request.

Miniflow SAMF

Performance, SFP & Electrical Data

AC

SINGLE Phase - 220V to 240V / 50Hz

Product Code	Speed r/min	Airflow SFP	Airflow m³/s @ Static Pressure Pa.						Overall Efficiency %	FMEG	Motor Electrical Data		dBA @ 3m	
			0	25	50	75	100	150			FLC Amps	Input kW		
SAMF150/2-2	2760	**m³ / s**	**0.110**	**0.084**	**0.064**	**0.044**	**0.022**		7.5	-	0.25	0.046	Inlet	43
		W / (L/s)	0.45	0.58	0.77	1.12	2.13						Outlet	-
SAMF200/2-2	2580	**m³ / s**	**0.239**	**0.208**	**0.171**	**0.135**	**0.107**		14.6	-	0.21	0.060	Inlet	51
		W / (L/s)	0.33	0.38	0.47	0.59	0.74						Outlet	-
SAMF200/4-2	1440	**m³ / s**	**0.144**	**0.094**	**0.054**	**0.017**			8.2	-	0.13	0.030	Inlet	37
		W / (L/s)	0.25	0.39	0.67	1.98							Outlet	-
SAMF250/2-2	2605	**m³ / s**	**0.450**	**0.433**	**0.404**	**0.339**	**0.268**	**0.142**	32.0	-	0.55	0.124	Inlet	49
		W / (L/s)	0.26	0.27	0.29	0.35	0.45	0.88					Outlet	-
SAMF250/4-2	1380	**m³ / s**	**0.279**	**0.231**	**0.151**	**0.079**			12.6	-	0.21	0.050	Inlet	40
		W / (L/s)	0.26	0.31	0.49	0.93							Outlet	-
SAMF315/4-2	1320	**m³ / s**	**0.556**	**0.442**	**0.281**	**0.162**	**0.082**		20.9	-	0.32	0.070	Inlet	47
		W / (L/s)	0.17	0.21	0.34	0.60	1.21						Outlet	-

Overall total efficiency, r/min and FMEG values are per ISO 12759 installation category D. FLC Amps @ 230V / 1Ph / 50Hz.
Data provided at standard air density of 1.2 kg/m³.
The overall A-weighted sound pressure level is at a distance of 3m with spherical free-field propagation. It is expressed in dB re-20μPa and is presented for comparative purposes only.

Sound Data

SINGLE Phase - 220V to 240V / 50Hz

Product Code		Sound Power Level dBW @ Octave Band Hz								Total dB	Silencer dBA Attenuation			
		63Hz	125Hz	250Hz	500Hz	1 kHz	2 kHz	4 kHz	8 kHz		JF1	JF2	JF3	JF4
SAMF150/2-2	Inlet	49	51	59	56	58	58	56	48	65	-17	-24	-27	-29
	Outlet	-	-	-	-	-	-	-	-	-	-	-	-	-
SAMF200/2-2	Inlet	68	69	68	67	69	66	60	49	76	-15	-20	-25	-28
	Outlet	-	-	-	-	-	-	-	-	-	-	-	-	-
SAMF200/4-2	Inlet	60	60	54	56	54	49	40	30	65	-12	-17	-21	-24
	Outlet	-	-	-	-	-	-	-	-	-	-	-	-	-
SAMF250/2-2	Inlet	64	69	67	67	65	60	60	51	74	-13	-17	-20	-23
	Outlet	-	-	-	-	-	-	-	-	-	-	-	-	-
SAMF250/4-2	Inlet	63	64	57	57	57	54	47	37	68	-12	-16	-19	-21
	Outlet	-	-	-	-	-	-	-	-	-	-	-	-	-
SAMF315/4-2	Inlet	60	64	64	61	64	62	55	46	71	-14	-17	-20	-23
	Outlet	-	-	-	-	-	-	-	-	-	-	-	-	-

Please contact Elta Fans for sound data.

Tests and preparation of the sound data have been carried out in accordance with BS 848 Part 2:1985 at 50% peak pressure.
The Sound Power Level Spectra are in dB re-1pW.

Elta Fans Limited has a policy of continuous product development and improvement and therefore reserves the right to supply products which may differ from those illustrated and described in this publication.
Confirmation of dimensions and data will be supplied on request.

Miniflow SAMF

Accessories & Wiring Data

AC

For more information on Accessories & Wiring Diagrams, please see individual product downloads, or visit eltaselect.com/information-centre

SINGLE Phase - 220V to 240V / 50Hz

Product Code	Electronic Controller	Mounting Brackets (each)	Flexible Connections (each)	Clamps (each)	AV Mounts (set of 4)	Damper
SAMF150/2-2	149-EL31	-	063-0150-SAMF	018-150-CLAMP	062-S1B	018-150-DAMPER
SAMF200/2-2	149-EL31	060A-SAMF200-MB	063-0200-SAMF	018-200-CLAMP	062-S1B	018-200-DAMPER
SAMF200/4-2	149-EL31	060A-SAMF200-MB	063-0200-SAMF	018-200-CLAMP	062-S1B	018-200-DAMPER
SAMF250/2-2	149-EL31	060A-SAMF250-MB	063-0250-SAMF	018-250-CLAMP	062-S1G	018-250-DAMPER
SAMF250/4-2	149-EL31	060A-SAMF250-MB	063-0250-SAMF	018-250-CLAMP	062-S1B	018-250-DAMPER
SAMF315/4-2	149-EL31	060A-SAMF315-MB	063-0315-SAMF	018-315-CLAMP	062-S1G	018-315-DAMPER

Product Code	Silencer 300mm Long	Silencer 600mm Long	Silencer 900mm Long	Silencer 1200mm Long	Wiring Diagram No.
SAMF150/2-2	068-0150-JF1	068-0150-JF2	068-0150-JF3	068-0150-JF4	152-503
SAMF200/2-2	068-0200-JF1	068-0200-JF2	068-0200-JF3	068-0200-JF4	152-503
SAMF200/4-2	068-0200-JF1	068-0200-JF2	068-0200-JF3	068-0200-JF4	152-503
SAMF250/2-2	068-0250-JF1	068-0250-JF2	068-0250-JF3	068-0250-JF4	152-503
SAMF250/4-2	068-0250-JF1	068-0250-JF2	068-0250-JF3	068-0250-JF4	152-503
SAMF315/4-2	068-0315-JF1	068-0315-JF2	068-0315-JF3	068-0315-JF4	152-503

Optimum Energy Efficiency Point

SINGLE Phase - 220V to 240V / 50Hz

Product Code	Volume m^3/s	Pressue Pa	Input kW	Speed r/min	Efficiency %	FMEG
SAMF150/2-2	0.060	62	0.050	2760	7.5	-
SAMF200/2-2	0.146	80	0.080	2580	14.6	-
SAMF200/4-2	0.071	42	0.036	1440	8.2	-
SAMF250/2-2	0.388	96	0.117	2605	32.0	-
SAMF250/4-2	0.205	45	0.073	1380	12.6	-
SAMF315/4-2	0.468	42	0.094	1320	20.9	-

Data provided at standard air density of 1.2 kg/m^3.
Values are per ISO 12759 installation category D (total).

Elta Fans Limited has a policy of continuous product development and improvement and therefore reserves the right to supply products which may differ from those illustrated and described in this publication. Confirmation of dimensions and data will be supplied on request.

Miniflow SAMF

Dimensional Data

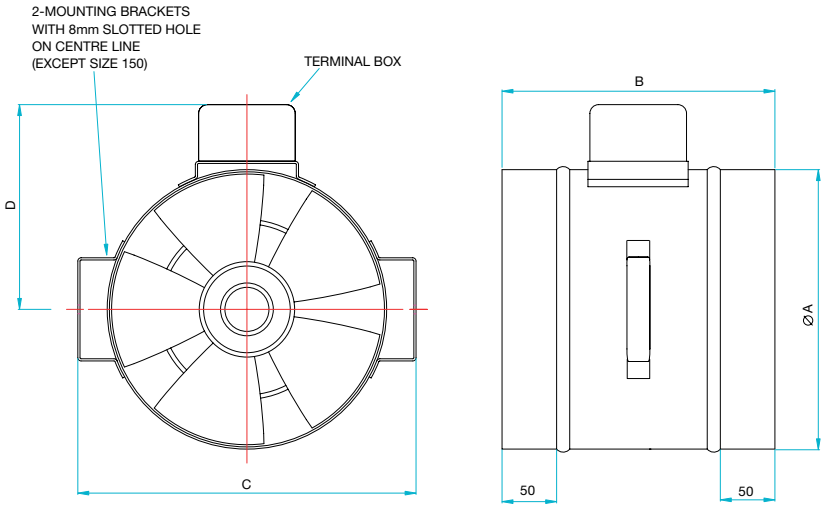

Product Code	A	B	C	D	Weight kg
SAMF150	147	165	-	-	1.5
SAMF200	206	250	236	164	3.5
SAMF250	260	250	296	190	4.0
SAMF315	311	250	346	219	4.8

All dimensions are expressed in mm.

Elta Fans Limited has a policy of continuous product development and improvement and therefore reserves the right to supply products which may differ from those illustrated and described in this publication. Confirmation of dimensions and data will be supplied on request.

BUILDING SERVICES

Tel: +44 (0) 1384 275800
Fax: +44 (0) 1384 275810
e-mail: bs@eltafans.co.uk

46 Third Avenue
Pensnett Trading Estate
Kingswinford, West Midlands
DY6 7US, United Kingdom

APPLIED TECHNOLOGY

Tel: +44 (0) 1489 566500
Fax: +44 (0) 1489 566555
e-mail: at@eltafans.co.uk

17 Barnes Wallis Road
Segensworth East Industrial Estate
Fareham, Hampshire
PO15 5ST, United Kingdom

EXPORT

Tel: +44 (0) 1489 566500
Fax: +44 (0) 1489 566555
e-mail: export@eltafans.co.uk

17 Barnes Wallis Road
Segensworth East Industrial Estate
Fareham, Hampshire
PO15 5ST, United Kingdom

www.eltafans.com

BS EN ISO 9001:2008
FM 556465

A member of
HEVAC ASSOCIATION

CIBSE
PATRONS

A member of ELTA GROUP LIMITED