ELTA SELECT

Compact PowerPlus SCPP

Product Brochure

t: **01384 275800**
f: **01384 275810**
e: **bs@eltafans.co.uk**
visit: **eltaselect.com**

Compact PowerPlus SCPP

axial

Contra-Rotating Axial Flow Fan

OVERVIEW

The Compact SCPP is a two stage axial fan which is specifically developed for high pressure requirements that are not suited to single stage fans, with particular emphasis on commercial kitchen extract applications, where regulations for more efficient filtration systems, and use of Carbon and Baffle filters have established the need for higher pressure development from fans operating at higher working temperatures.

MORE INFORMATION	AC PAGE NO.
Performance, SFP & Electrical Data	3
Sound Data	3
Accessories & Wiring Data	3
Optimum Energy Efficiency Point	4
Dimensional Data	4

QUICK FACTS

- ✓ 3 standard sizes from 500mm to 630mm.
- ✓ Air volume flow rates up to 4.3 m³/s.
- ✓ Static pressures up to 600 Pa.
- ✓ Ideal for internal or external use.
- ✓ Extensive stock range available.

CASING

The all metal fan casing provides a long lasting and robust construction. The units have been constructed from a single sheet of steel, with both motors and axial impellers mounted within the length of the unit casing. All casing parts are heavy gauge mild steel sheet, roll formed and welded, then hot dip galvanised to BS EN ISO 1461:2009 after fabrication.

IMPELLER

Adjustable pitch aerofoil impellers are provided with blades made from high quality pressure die cast aluminium (LM6), natural finish.

Impellers are factory set at an angle to provide maximum performance. The hubs are manufactured from die cast aluminium alloy (LM24). Assembled impellers are to be dynamically balanced to ISO 14694 Grade G6.3.

MOTORS

Motors are highly efficient, lightweight induction motors with sealed for life, maintenance free ball bearings, which allows the fan to be installed at any angle.

Each motor is matched to the aerodynamic performance of the impeller. Motors are Class F insulated to EN 60034-5, weatherproofed to IP55 and (excluding size 630) suitable for speed control. Each motor has integral thermal overload protection. Fans are suitable for operating temperatures between -20°C and +70°C fixed speed and -20°C and +50°C when used with a speed controller. Electrical connection to the motor is provided by an IP55 terminal box which is fitted onto the outer side of the fan casing.

QUALITY MANAGEMENT

Units are to be designed and manufactured with procedures as defined in BS EN ISO 9001:2008. All SCPP units are to be tested to ISO 5801:2007 (airside performance) and BS 848 Part 2:1985 (sound performance).

TYPICAL APPLICATIONS

- Commercial Kitchens
- Sports Halls
- Industrial Units
- Warehousing
- Factories
- Schools

Elta Fans Limited has a policy of continuous product development and improvement and therefore reserves the right to supply products which may differ from those illustrated and described in this publication. Confirmation of dimensions and data will be supplied on request.

Compact PowerPlus SCPP

AC

Performance, SFP & Electrical Data

SINGLE Phase - 220V to 240V / 50Hz

Product Code	Speed r/min	Airflow SFP	Airflow m³/s @ Static Pressure Pa.												Overall Efficiency %	FMEG	Motor Electrical Data			dBA @ 3m	
			0	25	50	75	100	150	200	250	300	350	400	500			FLC Amps	SLC Amps	Input kW		
SCPP500/4-1	1350	m³ / s	2.370	2.339	2.307	2.275	2.242	2.172	2.096	2.010	1.908	1.781	1.616		47.7	N52	7.20	21.6	1.51	Inlet	63
		W / (L/s)	0.49	0.51	0.53	0.54	0.56	0.60	0.65	0.70	0.76	0.84	0.93							Outlet	-
SCPP560/4-1	1350	m³ / s	3.193	3.152	3.110	3.065	3.019	2.918	2.804	2.673	2.517	2.320	2.057	1.305	49.9	N54	9.80	30.0	1.89	Inlet	67
		W / (L/s)	0.43	0.45	0.47	0.49	0.51	0.56	0.61	0.67	0.73	0.81	0.92	1.38						Outlet	-
SCPP630/4-1	1350	m³ / s	4.290	4.240	4.188	4.133	4.076	3.953	3.816	3.660	3.480	3.268	3.011	2.311	47.9	N51	15.80	39.6	2.91	Inlet	71
		W / (L/s)	0.50	0.52	0.54	0.56	0.58	0.62	0.67	0.73	0.79	0.87	0.96	1.27						Outlet	-

Overall total efficiency, r/min and FMEG values are per ISO 12759 installation category D. FLC Amps @ 230V / 1Ph / 50Hz.
Data provided at standard air density of 1.2 kg/m³.
The overall A-weighted sound pressure level is at a distance of 3m with spherical free-field propagation. It is expressed in dB re-20μPa and is presented for comparative purposes only.

Sound Data

SINGLE Phase - 220V to 240V / 50Hz

Product Code		Sound Power Level dBW @ Octave Band Hz								Total dB	Silencer dBA Attenuation				
		63Hz	125Hz	250Hz	500Hz	1 kHz	2 kHz	4 kHz	8 kHz			1DENP	2DENP	1DEP	2DEP
SCPP500/4-1	Inlet	76	76	82	79	79	77	73	67	87	Inlet	-10	-15	-13	-16
	Outlet	-	-	-	-	-	-	-	-	-	Outlet	-	-	-	-
SCPP560/4-1	Inlet	82	80	84	84	83	82	79	72	91	Inlet	-10	-15	-13	-16
	Outlet	-	-	-	-	-	-	-	-	-	Outlet	-	-	-	-
SCPP630/4-1	Inlet	85	83	87	88	86	86	82	77	94	Inlet	-10	-14	-15	-22
	Outlet	-	-	-	-	-	-	-	-	-	Outlet	-	-	-	-

Please contact Elta Fans for sound data.
Tests and preparation of the sound data have been carried out in accordance with BS 848 Part 2:1985 at 50% peak pressure.
The Sound Power Level Spectra are in dB re-1pW.

Accessories & Wiring Data

For more information on Accessories & Wiring Diagrams, please see individual product downloads, or visit eltaselect.com/information-centre

SINGLE Phase - 220V to 240V / 50Hz

Product Code	Electronic Controller	Transformer Controller	Impeller Side Guard	Ancillary Pack*	Mounting Feet (each)	Matching Flanges (each)	Flexible Connections (each)	AV Mounts (set of 4)	Damper
SCPP500/4-1	149-EL101	149-TC18	078C-0500-C	APK500SI/S2B	060B-0500	061B-0500	063-0500-MAN150	062-S2B	019-0500-STD
SCPP560/4-1	-	149-TC110	078C-0560-C	APK560SI/S2B	060B-0560	061B-0560	063-0560-MAN200	062-S2B	019-0560-STD
SCPP630/4-1	-	-	078C-0630-C	APK630SI/S2B	060B-0630	061B-0630	063-0630-MAN200	062-S2B	019-0630-STD

*Consists of Flexible Connectors, Matching Flanges, AV Mounts and Mounting Feet.

Product Code	Bell Mouth Inlet	Silencer 1D Podded	Silencer 1D Unpodded	Silencer 2D Podded	Silencer 2D Unpodded	Wiring Diagram No.
SCPP500/4-1	241B-0500-BELL	068-0500-1DEP	068-0500-1DENP	068-0500-2DEP	068-0500-2DENP	152-510
SCPP560/4-1	241B-0560-BELL	068-0560-1DEP	068-0560-1DENP	068-0560-2DEP	068-0560-2DENP	152-510
SCPP630/4-1	241B-0630-BELL	068-0630-1DEP	068-0630-1DENP	068-0630-2DEP	068-0630-2DENP	152-510

Melinex lined silencers must be used to prevent grease impregnation into the acoustic media for kitchen extract applications as prescribed for kitchen ventilation systems.
Contact Elta Fans for insertion losses for melinex lined silencers.

Elta Fans Limited has a policy of continuous product development and improvement and therefore reserves the right to supply products which may differ from those illustrated and described in this publication. Confirmation of dimensions and data will be supplied on request.

Compact PowerPlus SCPP

Optimum Energy Efficiency Point

AC

SINGLE Phase - 220V to 240V / 50Hz

Product Code	Volume m³/s	Pressue Pa	Input kW	Speed r/min	Efficiency %	FMEG
SCPP500/4-1	1.771	403	1.494	1350	47.7	N52
SCPP560/4-1	2.407	387	1.867	1350	49.9	N54
SCPP630/4-1	3.276	415	2.836	1350	47.9	N51

Data provided at standard air density of 1.2 kg/m³.
Values are per ISO 12759 installation category D (total).

Dimensional Data

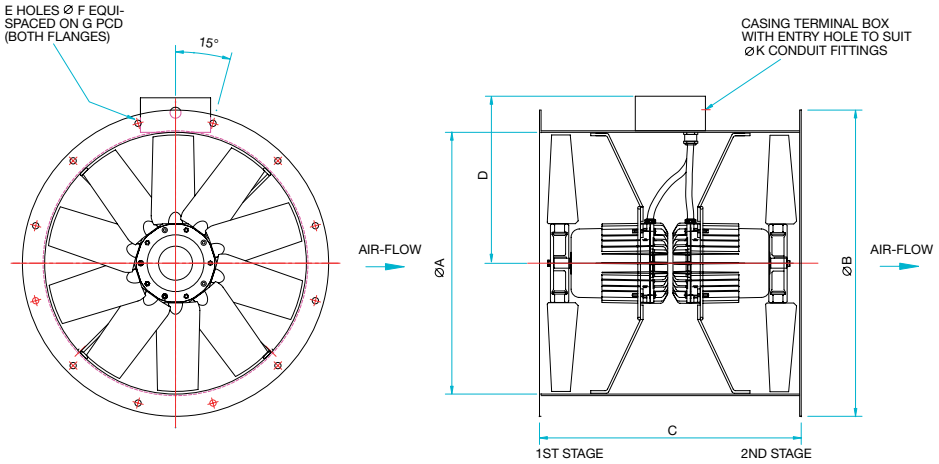

Product Code	Fan Dia A	B	C	D	E	F	G	K	Weight kg
SCPP500	500	585	500	315	12	12	560	20	55
SCPP560	560	645	500	345	12	12	620	20	60
SCPP630	630	715	500	380	12	12	690	20	70

All dimensions are expressed in mm.

Elta Fans Limited has a policy of continuous product development and improvement and therefore reserves the right to supply products which may differ from those illustrated and described in this publication. Confirmation of dimensions and data will be supplied on request.

BUILDING SERVICES

Tel: +44 (0) 1384 275800
Fax: +44 (0) 1384 275810
e-mail: bs@eltafans.co.uk

46 Third Avenue
Pensnett Trading Estate
Kingswinford, West Midlands
DY6 7US, United Kingdom

APPLIED TECHNOLOGY

Tel: +44 (0) 1489 566500
Fax: +44 (0) 1489 566555
e-mail: at@eltafans.co.uk

17 Barnes Wallis Road
Segensworth East Industrial Estate
Fareham, Hampshire
PO15 5ST, United Kingdom

EXPORT

Tel: +44 (0) 1489 566500
Fax: +44 (0) 1489 566555
e-mail: export@eltafans.co.uk

17 Barnes Wallis Road
Segensworth East Industrial Estate
Fareham, Hampshire
PO15 5ST, United Kingdom

www.eltafans.com

BS EN ISO 9001:2008
FM 556465

A member of
HEVAC ASSOCIATION

CIBSE
PATRONS

A member of ELTA GROUP LIMITED