ELTA SELECT

Hideaway SH

Product Brochure

t: **01384 275800**
f: **01384 275810**
e: **bs@eltafans.co.uk**
visit: **eltaselect.com**

Hideaway SH

Centrifugal Box Fan

centrifugal

OVERVIEW

The Hideaway SH...ECL incorporates the BAT (Best Available Technology) Vpro backward curved impeller, with three dimensional profiled blades powered by the ultra reliable Ziehl-Abegg EC (electronically commutated) external rotor motor. The fan design, construction and finish provide a strong and durable range that boasts low noise and increased efficiency.

MORE INFORMATION	AC	EC
	PAGE NO.	
Performance, SFP & Electrical Data	3	5
Sound Data	3	7
Accessories & Wiring Data	4	9
Optimum Energy Efficiency Point	4	9
Dimensional Data	10	

QUICK FACTS

- ✓ 6 standard sizes from 100mm to 315mm.
- ✓ Air volume flow rates up to 0.33 m³/s (AC) 0.37 m³/s (EC).
- ✓ Static pressures up to 500 Pa (AC) 900 Pa (EC).
- ✓ Suitable for operating temperatures up to +60°C.
- ✓ Extensive stock range available.

CASING

The robust 1.2mm galvanised mild steel sheet casing, is treated internally with a Class O rated (BS 476 Parts 6 and 7) fire resistant acoustic foam lining with a fire resistant polymeric coating. The casing is specially manufactured using integral motor mounting plates to provide additional rigidity for the casings.

Each casing provides spigots to suit standard circular ducting. EPDM (Ethylene Propylene) rubber U shaped seals (being ozone and UV stable) are used to ensure a good seal back to the duct that is to be attached. A removable lid is provided as a standard feature to facilitate ease of maintenance and cleaning.

IMPELLER

High efficiency low tonal noise backward curved centrifugal impeller, dynamically balanced to ISO 14694 Grade G6.3 and directly driven by the motor.

MOTORS

The single range of units may have either an EC or AC external rotor motor fitted as standard. The motor contains sealed for life bearings. Thermal Class of motors to THCL 130 or 155 dependent on size.

Manufactured by Ziehl-Abegg providing increased reliability. All motors are suitable for use in ambient air conditions up to +60°C.

QUALITY MANAGEMENT

Units are to be designed and manufactured with procedures as defined in BS EN ISO 9001:2008. All SH units are to be tested to ISO 5801:2007 (airside performance) and BS 848 Part 2:1985 (sound performance).

TYPICAL APPLICATIONS

- Bathroom and Kitchen Extract in Apartments
- Hotels
- Residential Properties
- Libraries
- Offices

Elta Fans Limited has a policy of continuous product development and improvement and therefore reserves the right to supply products which may differ from those illustrated and described in this publication. Confirmation of dimensions and data will be supplied on request.

Hideaway SH

Performance, SFP & Electrical Data

AC

SINGLE Phase - 220V to 240V / 50Hz

Product Code	Speed r/min	Airflow SFP	Airflow m³/s @ Static Pressure Pa.												Overall Efficiency %	FMEG	Motor Electrical Data			dBA @ 3m	
			0	25	50	75	100	150	200	250	300	350	400	500			FLC Amps	SC Amps	Input kW		
SH100-1ACL	2518	m³ / s	0.076	0.075	0.073	0.071	0.069	0.064	0.056	0.043	0.031	0.018			20.7	-	0.28	0.48	0.064	Inlet	50
																				Outlet	49
		W / (L/s)	0.82	0.84	0.86	0.88	0.91	0.98	1.12	1.40	1.86	3.00								Breakout	41
SH125-1ACL	2502	m³ / s	0.094	0.092	0.090	0.087	0.085	0.078	0.068	0.054	0.036	0.016			23.6	-	0.28	0.48	0.066	Inlet	52
																				Outlet	52
		W / (L/s)	0.67	0.69	0.71	0.73	0.76	0.82	0.94	1.15	1.61	3.26								Breakout	41
SH150-1ACL	2510	m³ / s	0.118	0.113	0.109	0.104	0.099	0.087	0.073	0.056	0.034	0.007			24.4	-	0.28	0.48	0.064	Inlet	51
																				Outlet	53
		W / (L/s)	0.53	0.55	0.58	0.61	0.64	0.73	0.86	1.11	1.74	6.68								Breakout	44
SH200-1ACL	2456	m³ / s	0.203	0.198	0.193	0.187	0.181	0.164	0.140	0.113	0.086	0.063	0.040		28.7	-	0.46	0.82	0.104	Inlet	54
																				Outlet	56
		W / (L/s)	0.48	0.50	0.52	0.54	0.56	0.63	0.74	0.92	1.17	1.53	2.25							Breakout	49
SH250-1ACL	2506	m³ / s	0.239	0.232	0.224	0.215	0.205	0.184	0.161	0.136	0.111	0.084	0.055		25.5	N45	0.60	0.97	0.137	Inlet	53
																				Outlet	54
		W / (L/s)	0.53	0.55	0.58	0.61	0.64	0.73	0.84	1.00	1.22	1.59	2.33							Breakout	48
SH315-1ACL	2243	m³ / s	0.334	0.326	0.317	0.306	0.295	0.268	0.235	0.201	0.168	0.138	0.110	0.048	24.5	N42	0.94	1.70	0.213	Inlet	50
																				Outlet	51
		W / (L/s)	0.54	0.56	0.59	0.62	0.66	0.76	0.88	1.05	1.24	1.47	1.77	3.34						Breakout	46

Overall total efficiency, r/min and FMEG values are per ISO 12759 installation category D. FLC Amps @ 230V / 1Ph / 50Hz.
Data provided at standard air density of 1.2 kg/m³.
The overall A-weighted sound pressure level is at a distance of 3m with spherical free-field propagation. It is expressed in dB re-20μPa and is presented for comparative purposes only.

Sound Data

SINGLE Phase - 220V to 240V / 50Hz

Product Code		Sound Power Level dBW @ Octave Band Hz								Total dB	Silencer dBA Attenuation			
		63Hz	125Hz	250Hz	500Hz	1 kHz	2 kHz	4 kHz	8 kHz		300L	600L	900L	1200L
SH100-1ACL	Inlet	70	72	79	66	49	44	39	35	80	-9	-15	-21	-23
	Outlet	73	75	78	66	54	47	44	39	81	-9	-15	-20	-22
	Breakout	49	58	68	61	52	48	42	41	69	-	-	-	-
SH125-1ACL	Inlet	74	74	80	70	51	47	37	31	82	-9	-14	-19	-22
	Outlet	75	72	81	68	56	49	44	40	83	-8	-14	-18	-21
	Breakout	47	54	67	61	53	47	41	40	68	-	-	-	-
SH150-1ACL	Inlet	74	72	80	68	49	48	43	38	82	-7	-13	-16	-18
	Outlet	76	75	82	69	55	51	47	43	84	-7	-12	-15	-18
	Breakout	49	55	71	63	54	49	41	39	72	-	-	-	-
SH200-1ACL	Inlet	77	78	83	70	56	51	49	45	85	-6	-10	-14	-17
	Outlet	81	78	85	71	58	55	49	42	87	-6	-10	-14	-17
	Breakout	56	65	78	67	56	52	46	41	79	-	-	-	-
SH250-1ACL	Inlet	76	78	82	69	58	53	53	53	84	-6	-10	-12	-15
	Outlet	80	78	81	72	63	58	54	55	85	-7	-11	-13	-16
	Breakout	59	65	75	67	58	51	44	45	76	-	-	-	-
SH315-1ACL	Inlet	75	74	79	61	55	49	50	51	81	-6	-8	-10	-14
	Outlet	74	74	79	66	61	56	52	52	81	-7	-9	-11	-15
	Breakout	55	60	75	63	57	49	41	39	76	-	-	-	-

Tests and preparation of the sound data have been carried out in accordance with BS 848 Part 2:1985 at 50% peak pressure.
The Sound Power Level Spectra are in dB re-1pW.

Elta Fans Limited has a policy of continuous product development and improvement and therefore reserves the right to supply products which may differ from those illustrated and described in this publication. Confirmation of dimensions and data will be supplied on request.

Hideaway SH

Accessories & Wiring Data

AC

For more information on Accessories & Wiring Diagrams, please see individual product downloads, or visit eltaselect.com/information-centre

SINGLE Phase - 220V to 240V / 50Hz

Product Code	Electronic Controller	Flexible Connections (each)	Clamps (each)	Damper	Panel Filter	Electric Heater Battery
SH100-1ACL	149-EL21	018-0100-FLEX	018-100-CLAMP	018-100-DAMPER	018-0100-FILT-P	018-0100-HEAT-1
SH125-1ACL	149-EL21	018-0125-FLEX	018-125-CLAMP	018-125-DAMPER	018-0125-FILT-P	018-0125-HEAT-1
SH150-1ACL	149-EL21	018-0150-FLEX	018-150-CLAMP	018-150-DAMPER	018-0150-FILT-P	018-0150-HEAT-1
SH200-1ACL	149-EL21	018-0200-FLEX	018-200-CLAMP	018-200-DAMPER	018-0200-FILT-P	018-0200-HEAT-1
SH250-1ACL	149-EL21	018-0250-FLEX	018-250-CLAMP	018-250-DAMPER	018-0250-FILT-P	018-0250-HEAT-1
SH315-1ACL	149-EL21	018-0315-FLEX	018-315-CLAMP	018-315-DAMPER	018-0315-FILT-P	018-0315-HEA1/3

Product Code	Silencer 300mm Long	Silencer 600mm Long	Silencer 900mm Long	Silencer 1200mm Long	Wiring Diagram No.
SH100-1ACL	068-0100-JF1	068-0100-JF2	068-0100-JF3	068-0100-JF4	152-177
SH125-1ACL	068-0125-JF1	068-0125-JF2	068-0125-JF3	068-0125-JF4	152-177
SH150-1ACL	068-0150-JF1	068-0150-JF2	068-0150-JF3	068-0150-JF4	152-177
SH200-1ACL	068-0200-JF1	068-0200-JF2	068-0200-JF3	068-0200-JF4	152-177
SH250-1ACL	068-0250-JF1	068-0250-JF2	068-0250-JF3	068-0250-JF4	152-177
SH315-1ACL	068-0315-JF1	068-0315-JF2	068-0315-JF3	068-0315-JF4	152-177

Optimim Energy Efficiency Point

SINGLE Phase - 220V to 240V / 50Hz

Product Code	Volume m^3/s	Pressure Pa	Input kW	Speed r/min	Efficiency %	FMEG
SH100-1ACL	0.057	227	0.063	2518	20.7	-
SH125-1ACL	0.065	233	0.064	2502	23.6	-
SH150-1ACL	0.072	216	0.064	2510	24.4	-
SH200-1ACL	0.135	223	0.105	2456	28.7	-
SH250-1ACL	0.135	258	0.137	2506	25.5	N45
SH315-1ACL	0.175	293	0.209	2243	24.5	N42

Data provided at standard air density of 1.2 kg/m^3.
Values are per ISO 12759 installation category D (total).

Elta Fans Limited has a policy of continuous product development and improvement and therefore reserves the right to supply products which may differ from those illustrated and described in this publication. Confirmation of dimensions and data will be supplied on request.

Hideaway SH

Performance, SFP & Electrical Data

EC

SINGLE Phase - 200V to 277V / 50Hz or 60Hz

Product Code	Contol Voltage	Airflow SFP	Airflow m³/s @ Static Pressure Pa.												Overall Efficiency %	FMEG	Motor Electrical Data		dBA @ 3m	
			0	25	50	75	100	150	200	250	300	350	400	500			FLC Amps	Input kW		
SH100-1ECL	10V	m³ / s	0.118	0.115	0.113	0.110	0.107	0.102	0.097	0.092	0.087	0.081	0.075	0.061	31.0	N50	1.14	0.140	Inlet	58
																			Outlet	58
		W / (l/s)	1.15	1.18	1.21	1.24	1.27	1.33	1.39	1.45	1.52	1.61	1.71	2.03					Breakout	48
	8V	m³ / s	0.103	0.100	0.098	0.095	0.092	0.088	0.083	0.078	0.073	0.068	0.063	0.050	31.7		0.87	0.106	Inlet	-
																			Outlet	-
		W / (l/s)	0.96	0.98	1.00	1.03	1.05	1.11	1.18	1.25	1.35	1.46	1.60	2.05					Breakout	-
	5V	m³ / s	0.062	0.060	0.056	0.053	0.048	0.039	0.030	0.023	0.016	0.008			23.6		0.33	0.042	Inlet	-
																			Outlet	-
		W / (l/s)	0.49	0.52	0.55	0.60	0.65	0.84	1.11	1.55	2.33	4.43							Breakout	-
	2V	m³ / s	0.020	0.009											3.5		0.07	0.009	Inlet	-
																			Outlet	-
		W / (l/s)	0.43	0.94															Breakout	-
SH125-1ECL	10V	m³ / s	0.133	0.131	0.129	0.126	0.124	0.120	0.115	0.109	0.103	0.097	0.089	0.071	33.9	N53	1.11	0.136	Inlet	60
																			Outlet	61
		W / (l/s)	1.00	1.01	1.03	1.04	1.06	1.10	1.14	1.20	1.27	1.36	1.47	1.85					Breakout	53
	8V	m³ / s	0.113	0.111	0.110	0.108	0.107	0.103	0.098	0.092	0.085	0.078	0.071	0.055	35.2		0.86	0.107	Inlet	-
																			Outlet	-
		W / (l/s)	0.86	0.87	0.88	0.89	0.91	0.94	0.99	1.06	1.14	1.25	1.38	1.82					Breakout	-
	5V	m³ / s	0.073	0.069	0.065	0.060	0.055	0.044	0.032	0.022	0.013	0.006			25.7		0.32	0.042	Inlet	-
																			Outlet	-
		W / (l/s)	0.41	0.44	0.47	0.51	0.57	0.73	1.02	1.56	2.72	6.38							Breakout	-
	2V	m³ / s	0.022	0.012											2.5		0.07	0.009	Inlet	-
																			Outlet	-
		W / (l/s)	0.44	0.75															Breakout	-
SH150-1ECL	10V	m³ / s	0.159	0.155	0.152	0.149	0.146	0.140	0.134	0.127	0.121	0.114	0.106	0.087	38.1	N57	1.20	0.142	Inlet	60
																			Outlet	60
		W / (l/s)	0.77	0.81	0.85	0.89	0.92	0.99	1.05	1.11	1.18	1.25	1.33	1.55					Breakout	54
	8V	m³ / s	0.139	0.135	0.132	0.128	0.124	0.115	0.107	0.099	0.090	0.082	0.073	0.053	36.9		0.83	0.100	Inlet	-
																			Outlet	-
		W / (l/s)	0.70	0.70	0.71	0.72	0.73	0.77	0.83	0.91	1.01	1.14	1.30	1.84					Breakout	-
	5V	m³ / s	0.086	0.079	0.073	0.066	0.059	0.043	0.030	0.020	0.012				26.6		0.30	0.040	Inlet	-
																			Outlet	-
		W / (l/s)	0.33	0.38	0.42	0.46	0.51	0.69	1.01	1.56	2.85								Breakout	-
	2V	m³ / s	0.026	0.007											3.8		0.07	0.009	Inlet	-
																			Outlet	-
		W / (l/s)	0.34	1.28															Breakout	-
SH200-1ECL	10V	m³ / s	0.291	0.287	0.282	0.277	0.272	0.259	0.245	0.229	0.213	0.197	0.182	0.154	38.7	N55	1.83	0.235	Inlet	60
																			Outlet	63
		W / (l/s)	0.79	0.80	0.81	0.82	0.84	0.88	0.94	1.01	1.09	1.18	1.28	1.51					Breakout	58
	8V	m³ / s	0.263	0.253	0.243	0.234	0.225	0.209	0.193	0.178	0.164	0.150	0.136	0.108	41.0		1.42	0.174	Inlet	-
																			Outlet	-
		W / (l/s)	0.64	0.64	0.65	0.66	0.68	0.72	0.77	0.84	0.93	1.03	1.15	1.49					Breakout	-
	5V	m³ / s	0.156	0.146	0.135	0.122	0.107	0.081	0.061	0.046	0.032	0.020	0.008		32.3		0.50	0.060	Inlet	-
																			Outlet	-
		W / (l/s)	0.29	0.30	0.33	0.37	0.42	0.56	0.77	1.09	1.63	2.78	6.80						Breakout	-
	2V	m³ / s	0.054	0.024	0.001										7.4		0.09	0.011	Inlet	-
																			Outlet	-
		W / (l/s)	0.19	0.44	7.53														Breakout	-

A variable speed drive is integrated within the fan.
Overall total efficiency, r/min and FMEG values are per ISO 12759 installation category D. FLC Amps @ 230V / 1Ph / 50Hz.
Data provided at standard air density of 1.2 kg/m³.
The overall A-weighted sound pressure level is at a distance of 3m with spherical free-field propagation. It is expressed in dB re-20μPa and is presented for comparative purposes only.

Elta Fans Limited has a policy of continuous product development and improvement and therefore reserves the right to supply products which may differ from those illustrated and described in this publication. Confirmation of dimensions and data will be supplied on request.

Hideaway SH

Performance, SFP & Electrical Data

EC

SINGLE Phase - 200V to 277V / 50Hz or 60Hz

Product Code	Contol Voltage	Airflow SFP	Airflow m³/s @ Static Pressure Pa.												Overall Efficiency %	FMEG	Motor Electrical Data		dBA @ 3m	
			0	25	50	75	100	150	200	250	300	350	400	500			FLC Amps	Input kW		
SH250-1ECL	10V	**m³ / s**	**0.314**	**0.310**	**0.305**	**0.301**	**0.296**	**0.285**	**0.273**	**0.260**	**0.245**	**0.228**	**0.209**	**0.165**	41.7	N58	1.85	0.235	Inlet	58
																			Outlet	60
		W / (L/s)	0.68	0.70	0.71	0.73	0.74	0.78	0.82	0.87	0.94	1.02	1.12	1.41					Breakout	56
	8V	**m³ / s**	**0.287**	**0.282**	**0.276**	**0.270**	**0.263**	**0.246**	**0.227**	**0.204**	**0.179**	**0.156**	**0.135**	**0.099**	41.6		1.33	0.177	Inlet	-
																			Outlet	-
		W / (L/s)	0.57	0.58	0.58	0.59	0.60	0.63	0.67	0.74	0.85	0.99	1.16	1.62					Breakout	-
	5V	**m³ / s**	**0.177**	**0.167**	**0.155**	**0.140**	**0.123**	**0.086**	**0.059**	**0.040**	**0.025**	**0.013**			34.4		0.43	0.058	Inlet	-
																			Outlet	-
		W / (L/s)	0.27	0.28	0.30	0.33	0.37	0.54	0.82	1.28	2.13	4.23							Breakout	-
	2V	**m³ / s**	**0.060**	**0.019**											6.5		0.08	0.011	Inlet	-
																			Outlet	-
		W / (L/s)	0.17	0.54															Breakout	-
SH315-1ECL	10V	**m³ / s**	**0.372**	**0.358**	**0.346**	**0.334**	**0.322**	**0.298**	**0.271**	**0.239**	**0.203**	**0.169**	**0.142**	**0.104**	36.5	N54	1.91	0.248	Inlet	53
																			Outlet	52
		W / (L/s)	0.57	0.59	0.60	0.62	0.64	0.68	0.74	0.82	0.95	1.14	1.37	1.95					Breakout	51
	8V	**m³ / s**	**0.309**	**0.298**	**0.285**	**0.272**	**0.257**	**0.223**	**0.186**	**0.149**	**0.118**	**0.094**	**0.075**	**0.047**	37.5		1.20	0.149	Inlet	-
																			Outlet	-
		W / (L/s)	0.40	0.41	0.43	0.45	0.47	0.53	0.63	0.79	1.02	1.32	1.70	2.89					Breakout	-
	5V	**m³ / s**	**0.193**	**0.172**	**0.146**	**0.115**	**0.087**	**0.048**	**0.022**						28.9		0.36	0.044	Inlet	-
																			Outlet	-
		W / (L/s)	0.20	0.22	0.25	0.32	0.42	0.81	1.90										Breakout	-
	2V	**m³ / s**	**0.072**	**0.009**											6.1		0.08	0.011	Inlet	-
																				-
		W / (L/s)	0.15	1.07																-

A variable speed drive is integrated within the fan.
Overall total efficiency, r/min and FMEG values are per ISO 12759 installation category D. FLC Amps @ 230V / 1Ph / 50Hz.
Data provided at standard air density of 1.2 kg/m³.
The overall A-weighted sound pressure level is at a distance of 3m with spherical free-field propagation. It is expressed in dB re-20μPa and is presented for comparative purposes only.

Elta Fans Limited has a policy of continuous product development and improvement and therefore reserves the right to supply products which may differ from those illustrated and described in this publication. Confirmation of dimensions and data will be supplied on request.

Hideaway SH

Sound Data

EC

SINGLE Phase - 200V to 277V / 50Hz or 60Hz

Product Code	Control Voltage		Sound Power Level dBW @ Octave Band Hz								Total dB	Silencer dBA Attenuation			
			63Hz	125Hz	250Hz	500Hz	1 kHz	2 kHz	4 kHz	8 kHz		300L	600L	900L	1200L
SH100-1ECL	10V	Inlet	76	79	85	78	56	52	44	43	87	-11	-17	-22	-24
		Outlet	81	81	84	79	65	56	48	43	88	-11	-17	-22	-24
		Breakout	58	62	72	69	57	53	47	45	74	-	-	-	-
	8V	Inlet	-	-	-	-	-	-	-	-	-	-	-	-	-
		Outlet	-	-	-	-	-	-	-	-	-	-	-	-	-
		Breakout	-	-	-	-	-	-	-	-	-	-	-	-	-
	5V	Inlet	-	-	-	-	-	-	-	-	-	-	-	-	-
		Outlet	-	-	-	-	-	-	-	-	-	-	-	-	-
		Breakout	-	-	-	-	-	-	-	-	-	-	-	-	-
	2V	Inlet	-	-	-	-	-	-	-	-	-	-	-	-	-
		Outlet	-	-	-	-	-	-	-	-	-	-	-	-	-
		Breakout	-	-	-	-	-	-	-	-	-	-	-	-	-
SH125-1ECL	10V	Inlet	84	81	86	81	58	55	48	51	90	-10	-16	-20	-23
		Outlet	86	79	87	81	67	59	51	50	90	-10	-15	-20	-23
		Breakout	57	61	76	75	62	57	50	50	79	-	-	-	-
	8V	Inlet	-	-	-	-	-	-	-	-	-	-	-	-	-
		Outlet	-	-	-	-	-	-	-	-	-	-	-	-	-
		Breakout	-	-	-	-	-	-	-	-	-	-	-	-	-
	5V	Inlet	-	-	-	-	-	-	-	-	-	-	-	-	-
		Outlet	-	-	-	-	-	-	-	-	-	-	-	-	-
		Breakout	-	-	-	-	-	-	-	-	-	-	-	-	-
	2V	Inlet	-	-	-	-	-	-	-	-	-	-	-	-	-
		Outlet	-	-	-	-	-	-	-	-	-	-	-	-	-
		Breakout	-	-	-	-	-	-	-	-	-	-	-	-	-
SH150-1ECL	10V	Inlet	86	79	85	81	58	56	49	46	90	-9	-15	-18	-20
		Outlet	85	81	86	80	66	60	55	53	90	-8	-14	-17	-20
		Breakout	59	61	78	75	61	56	50	49	80	-	-	-	-
	8V	Inlet	-	-	-	-	-	-	-	-	-	-	-	-	-
		Outlet	-	-	-	-	-	-	-	-	-	-	-	-	-
		Breakout	-	-	-	-	-	-	-	-	-	-	-	-	-
	5V	Inlet	-	-	-	-	-	-	-	-	-	-	-	-	-
		Outlet	-	-	-	-	-	-	-	-	-	-	-	-	-
		Breakout	-	-	-	-	-	-	-	-	-	-	-	-	-
	2V	Inlet	-	-	-	-	-	-	-	-	-	-	-	-	-
		Outlet	-	-	-	-	-	-	-	-	-	-	-	-	-
		Breakout	-	-	-	-	-	-	-	-	-	-	-	-	-
SH200-1ECL	10V	Inlet	87	80	86	80	63	58	53	52	90	-8	-12	-16	-19
		Outlet	90	84	90	82	69	65	58	57	94	-7	-12	-16	-19
		Breakout	64	70	83	79	65	61	56	57	85	-	-	-	-
	8V	Inlet	-	-	-	-	-	-	-	-	-	-	-	-	-
		Outlet	-	-	-	-	-	-	-	-	-	-	-	-	-
		Breakout	-	-	-	-	-	-	-	-	-	-	-	-	-
	5V	Inlet	-	-	-	-	-	-	-	-	-	-	-	-	-
		Outlet	-	-	-	-	-	-	-	-	-	-	-	-	-
		Breakout	-	-	-	-	-	-	-	-	-	-	-	-	-
	2V	Inlet	-	-	-	-	-	-	-	-	-	-	-	-	-
		Outlet	-	-	-	-	-	-	-	-	-	-	-	-	-
		Breakout	-	-	-	-	-	-	-	-	-	-	-	-	-

Please contact Elta Fans for full sound data.

Tests and preparation of the sound data have been carried out in accordance with BS 848 Part 2:1985 at 50% peak pressure.
The Sound Power Level Spectra are in dB re-1pW.

Elta Fans Limited has a policy of continuous product development and improvement and therefore reserves the right to supply products which may differ from those illustrated and described in this publication.
Confirmation of dimensions and data will be supplied on request.

Hideaway SH

Sound Data

EC

SINGLE Phase - 200V to 277V / 50Hz or 60Hz

Product Code	Control Voltage		Sound Power Level dBW @ Octave Band Hz								Total dB	Silencer dBA Attenuation			
			63Hz	125Hz	250Hz	500Hz	1 kHz	2 kHz	4 kHz	8 kHz		300L	600L	900L	1200L
SH250-1ECL	10V	Inlet	79	77	85	78	63	59	56	55	87	-8	-12	-14	-17
		Outlet	89	84	86	78	69	65	60	59	92	-7	-11	-13	-16
		Breakout	63	67	79	77	66	60	53	53	82	-	-	-	-
	8V	Inlet	-	-	-	-	-	-	-	-	-	-	-	-	-
		Outlet	-	-	-	-	-	-	-	-	-	-	-	-	-
		Breakout	-	-	-	-	-	-	-	-	-	-	-	-	-
	5V	Inlet	-	-	-	-	-	-	-	-	-	-	-	-	-
		Outlet	-	-	-	-	-	-	-	-	-	-	-	-	-
		Breakout	-	-	-	-	-	-	-	-	-	-	-	-	-
	2V	Inlet	-	-	-	-	-	-	-	-	-	-	-	-	-
		Outlet	-	-	-	-	-	-	-	-	-	-	-	-	-
		Breakout	-	-	-	-	-	-	-	-	-	-	-	-	-
SH315-1ECL	10V	Inlet	77	75	82	63	57	51	52	52	84	-6	-8	-10	-14
		Outlet	78	75	79	68	63	59	54	55	83	-7	-9	-11	-15
		Breakout	64	64	78	69	63	56	49	49	79	-	-	-	-
	8V	Inlet	-	-	-	-	-	-	-	-	-	-	-	-	-
		Outlet	-	-	-	-	-	-	-	-	-	-	-	-	-
		Breakout	-	-	-	-	-	-	-	-	-	-	-	-	-
	5V	Inlet	-	-	-	-	-	-	-	-	-	-	-	-	-
		Outlet	-	-	-	-	-	-	-	-	-	-	-	-	-
		Breakout	-	-	-	-	-	-	-	-	-	-	-	-	-
	2V	Inlet	-	-	-	-	-	-	-	-	-	-	-	-	-
		Outlet	-	-	-	-	-	-	-	-	-	-	-	-	-
		Breakout	-	-	-	-	-	-	-	-	-	-	-	-	-

Please contact Elta Fans for full sound data.

Elta Fans Limited has a policy of continuous product development and improvement and therefore reserves the right to supply products which may differ from those illustrated and described in this publication. Confirmation of dimensions and data will be supplied on request.

Hideaway SH

Accessories & Wiring Data

EC

For more information on Accessories & Wiring Diagrams, please see individual product downloads, or visit eltaselect.com/information-centre

SINGLE Phase - 200V to 277V / 50Hz or 60Hz

Product Code	Electronic Controller	Flexible Connections (each)	Clamps (each)	Damper	Panel Filter	Electric Heater Battery
SH100-1ECL	149-POT-10	018-0100-FLEX	018-100-CLAMP	018-100-DAMPER	018-0100-FILT-P	018-0100-HEAT-1
SH125-1ECL	149-POT-10	018-0125-FLEX	018-125-CLAMP	018-125-DAMPER	018-0125-FILT-P	018-0125-HEAT-1
SH150-1ECL	149-POT-10	018-0150-FLEX	018-150-CLAMP	018-150-DAMPER	018-0150-FILT-P	018-0150-HEAT-1
SH200-1ECL	149-POT-10	018-0200-FLEX	018-200-CLAMP	018-200-DAMPER	018-0200-FILT-P	018-0200-HEAT-1
SH250-1ECL	149-POT-10	018-0250-FLEX	018-250-CLAMP	018-250-DAMPER	018-0250-FILT-P	018-0250-HEAT-1
SH315-1ECL	149-POT-10	018-0315-FLEX	018-315-CLAMP	018-315-DAMPER	018-0315-FILT-P	018-0315-HEA1/3

Product Code	Silencer 300mm Long	Silencer 600mm Long	Silencer 900mm Long	Silencer 1200mm Long	Wiring Diagram No.
SH100-1ECL	068-0100-JF1	068-0100-JF2	068-0100-JF3	068-0100-JF4	152-00036
SH125-1ECL	068-0125-JF1	068-0125-JF2	068-0125-JF3	068-0125-JF4	152-00036
SH150-1ECL	068-0150-JF1	068-0150-JF2	068-0150-JF3	068-0150-JF4	152-00036
SH200-1ECL	068-0200-JF1	068-0200-JF2	068-0200-JF3	068-0200-JF4	152-00036
SH250-1ECL	068-0250-JF1	068-0250-JF2	068-0250-JF3	068-0250-JF4	152-00036
SH315-1ECL	068-0315-JF1	068-0315-JF2	068-0315-JF3	068-0315-JF4	152-00036

Optimum Energy Efficiency Point

SINGLE Phase - 200V to 277V / 50Hz or 60Hz

Product Code	Volume m^3/s	Pressure Pa	Input kW	Speed r/min	Efficiency %	FMEG
SH100-1ECL	0.070	492	0.128	3496	31.0	N50
SH125-1ECL	0.086	452	0.132	3480	33.9	N53
SH150-1ECL	0.090	504	0.136	3458	38.1	N57
SH200-1ECL	0.148	535	0.232	3400	38.7	N55
SH250-1ECL	0.198	437	0.235	3334	41.7	N58
SH315-1ECL	0.210	295	0.193	2402	36.5	N54

Data provided at standard air density of 1.2 kg/m^3.
Values are per ISO 12759 installation category D (total).
A variable speed drive is integrated within the fan.

Elta Fans Limited has a policy of continuous product development and improvement and therefore reserves the right to supply products which may differ from those illustrated and described in this publication. Confirmation of dimensions and data will be supplied on request.

Hideaway SH

Dimensional Data

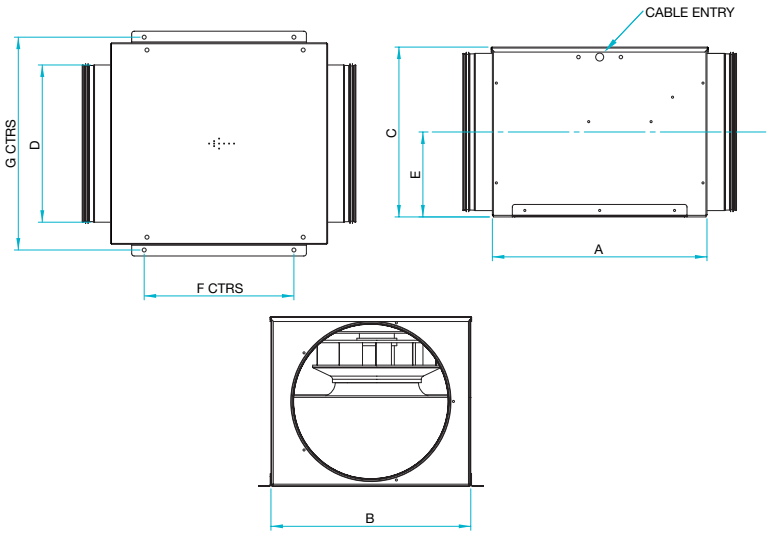

Product Code	A	B	C	D	E	F	G	Weight kg
SH100	400	300	166	100	83	300	325	10
SH125	400	300	166	125	83	300	325	10
SH150	400	300	182	150	91	300	325	10
SH200	424	350	231	200	115.5	300	375	12
SH250	452	350	281	250	140	300	375	14
SH315	430	400	340	315	170	300	426	16

All dimensions are expressed in mm.

Elta Fans Limited has a policy of continuous product development and improvement and therefore reserves the right to supply products which may differ from those illustrated and described in this publication. Confirmation of dimensions and data will be supplied on request.

BUILDING SERVICES

Tel: +44 (0) 1384 275800
Fax: +44 (0) 1384 275810
e-mail: bs@eltafans.co.uk

46 Third Avenue
Pensnett Trading Estate
Kingswinford, West Midlands
DY6 7US, United Kingdom

APPLIED TECHNOLOGY

Tel: +44 (0) 1489 566500
Fax: +44 (0) 1489 566555
e-mail: at@eltafans.co.uk

17 Barnes Wallis Road
Segensworth East Industrial Estate
Fareham, Hampshire
PO15 5ST, United Kingdom

EXPORT

Tel: +44 (0) 1489 566500
Fax: +44 (0) 1489 566555
e-mail: export@eltafans.co.uk

17 Barnes Wallis Road
Segensworth East Industrial Estate
Fareham, Hampshire
PO15 5ST, United Kingdom

www.eltafans.com

BS EN ISO 9001:2008
FM 556465

A member of
HEVAC ASSOCIATION

CIBSE
PATRONS

A member of ELTA GROUP LIMITED