ELTA SELECT

# Hideaway SH


t: 01384 275800
f: 01384 275810
e: bs@eltafans.co.uk
visit: eltaselect.com


AXIAL
MIXED FLOW
CENTRIFUGAL
ROOF
BIFURICATED
DE-STRATIFICATION
ATEX
SMOKE
CIRCULATING
WINDOW / WALL
HEAT RECOVERY
ATTENUATORS
CONTROLS

# Catalogue Guide

Icon Key

info

The Select Catalogue has a number of symbols and icons, designed to make the catalogue quicker and easier to use. An explanation of these are listed below:

## Application Icons

Applications are now represented via a set of pictorial icons. The application icons key is featured on the facing page. Some applications have been grouped together, where the environmental conditions have similarities.

## New Products

NEW PRODUCT

The icon to the right indicates a new addition to the Select product range. This will be displayed on the introductory page of each product and can also be seen on the contents page for each category.

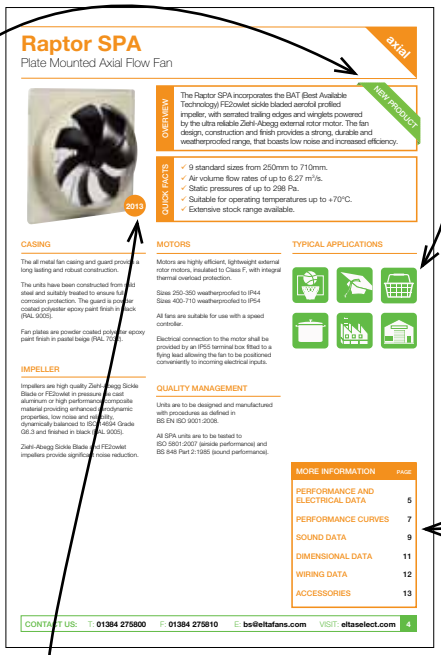

Raptor SPA

Plate Mounted Axial Flow Fan

Axial

NEW PRODUCT

OVERVIEW

The Raptor SPA incorporates the BAT (Best Available Technology) FE2owlet sickle bladed aerofoil profiled impeller, with serrated trailing edges and winglets powered by the ultra reliable Ziehl-Abegg external rotor motor. The fan design, construction and finish provides a strong, durable and weatherproofed range, that boasts low noise and increased efficiency.

QUICK FACTS

- 9 standard sizes from 250mm to 710mm.
- Air volume flow rates of up to 6.27 m³/s.
- Static pressures of up to 298 Pa.
- Suitable for operating temperatures up to +70°C.
- Extensive stock range available.

2013

CASING

The all metal fan casing and guard provide a long lasting and robust construction.

The units have been constructed from mild steel and suitably treated to ensure full corrosion protection. The guard is powder coated polyester epoxy paint finish in black (RAL 9005).

Fan plates are powder coated polyester epoxy paint finish in pastel beige (RAL 7032).

IMPELLER

Impellers are high quality Ziehl-Abegg Sickle Blade or FE2owlet in pressure cast aluminum or high performance composite material providing enhanced aerodynamic properties, low noise and reliability, dynamically balanced to ISO 21940 Grade G6.3 and finished in black (RAL 9005).

Ziehl-Abegg Sickle Blade and FE2owlet impellers provide significant noise reduction.

MOTORS

Motors are highly efficient, lightweight external rotor motors, insulated to Class F, with integral thermal overload protection.

Sizes 250-350 weatherproofed to IP44
Sizes 400-710 weatherproofed to IP54

All fans are suitable for use with a speed controller.

Electrical connection to the motor shall be provided by an IP55 terminal box fitted to a flying lead allowing the fan to be positioned conveniently to incoming electrical inputs.

QUALITY MANAGEMENT

Units are to be designed and manufactured with procedures as defined in BS EN ISO 9001:2008.

All SPA units are to be tested to ISO 5801:2007 (airside performance) and BS 848 Part 2:1985 (sound performance).

TYPICAL APPLICATIONS

MORE INFORMATION PAGE

| | |
|---|---|
| PERFORMANCE AND ELECTRICAL DATA | 5 |
| PERFORMANCE CURVES | 7 |
| SOUND DATA | 9 |
| DIMENSIONAL DATA | 11 |
| WIRING DATA | 12 |
| ACCESSORIES | 13 |

CONTACT US: T: 01384 275800 F: 01384 275810 E: bs@eltafans.com VISIT: eltaselect.com 4

## More Information Box

A more information box now also features on each introductory product page. This makes it easier to locate any further information you may require by displaying the page number to refer to, or directing you to the website - www.eltaselect.com.

## 2013

2013

New legislation has driven change in the Elta Select range of products. Elta Fans have revolutionised both their new and existing product range to meet legislation directives, but also to incorporate the 'Best Available Technology'; creating a reliable efficient and powerful range of products. The products which conform to the 2013 legislation are indicated with the above logo. This logo is pictured both on the main product page and the category contents page.

# Catalogue Guide

## Application Key

info

Each product has an indication of typical applications via a set of icons.
Every icon is displayed below, along with the definition of what it represents.

Sports Hall
Squash Courts
Gymnasium

Schools
Colleges

Shopping Mall

Shops
Retail Parks
Commercial

Kitchens

Factories
Industrial Units

Warehousing

Shower Rooms
Bathrooms
Toilets
Changing Rooms

Marine

Agriculture

Airports

Corrosive
Atmospheres

Banks

Hospitals

Hotels

Restaurants
Cafes
Cafeterias
Pubs

Theatres

Air Conditioning

Residential
Public Buildings
Entrance Halls

Underground
Stations

Libraries

Offices

Laundries
Utility Rooms

Temporary
Ventilation
Construction
Sites

Enclosed Car
Parks

Stairwell
Pressurisation

Workshops
Foundries
Welding Bays
Machine Shops
Spray Booths
Lift Motor Rooms

Marquees

Conference Halls

Cooling Towers
Stations
Boiler Houses
Heavy Industrial

Hot Gas
Situations

General HVAC

# Hideaway SH

Centrifugal Box Fan

centrif.

NEW PRODUCT

## OVERVIEW

The Hideaway SH...ECL incorporates the BAT (Best Available Technology) Vpro backward curved impeller, with three dimensional profiled blades powered by the ultra reliable Ziehl-Abegg EC (electronically commutated) external rotor motor. The fan design, construction and finish provide a strong, durable and weatherproofed range, that boasts low noise and increased efficiency.

## QUICK FACTS

- ✓ 6 standard sizes from 100mm to 315mm.
- ✓ Air volume flow rates of up to 0.33 $m^3/s$ (AC) 0.37 $m^3/s$ (EC).
- ✓ Static pressures of up to 500 Pa (AC) 900 Pa (EC).
- ✓ Suitable for operating temperatures up to +60°C.
- ✓ Extensive stock range available.

## CASING

The robust 1.2mm galvanised mild steel sheet casing, is treated internally with a Class O rated (BS 476 Parts 6 and 7) fire resistant acoustic foam lining with a fire resistant polymeric coating. The casing is specially manufactured using integral motor mounting plates to provide additional rigidity for the casings.

Each casing provides spigots to suit standard circular ducting. EPDM (Ethylene Propylene) rubber U shaped seals (being ozone and UV stable) are used to ensure a good seal back to the duct that is to be attached.

A removable lid is provided as a standard feature to facilitate ease of maintenance and cleaning.

## IMPELLER

High efficiency low tonal noise backward curved centrifugal impeller, dynamically balanced to ISO 14694 Grade G6.3 and directly driven by the motor to provide a smooth airflow through the unit.

## MOTORS

The single range of units may have either an EC or AC single rotor motor fitted as standard. The motor contains sealed for life bearings. Thermal Class of motors to THCL 130 or 155 dependent on size.

Manufactured by Ziehl-Abegg providing increased reliability.

All motors are suitable for use in ambient air conditions up to +60°C.

## QUALITY MANAGEMENT

Units are to be designed and manufactured with procedures as defined in BS EN ISO 9001:2008.

All SH units are to be tested to ISO 5801:2007 (airside performance) and BS 848 Part 2:1985 (sound performance).

## TYPICAL APPLICATIONS

## MORE INFORMATION


| MORE INFORMATION | PAGE |
|---|---|
| PERFORMANCE AND ELECTRICAL DATA | 5 |
| PERFORMANCE CURVES | 6 |
| SOUND DATA | 6 |
| DIMENSIONAL DATA | 7 |
| SILENCER DATA | 8 |
| WIRING DATA | 8 |
| ACCESSORIES | 9 |

# Hideaway SH

## Performance and Electrical Data

### SINGLE Phase - 200V-277V / 50Hz / 60Hz
### EC Motors

| Product Code | Speed r/min | Airflow SFP | Airflow m³/s @ Static Pressure Pa. | | | | | | | | | | | | Overall Efficiency % | FMEG | Motor Electrical Data | |
|---|---|---|---|---|---|---|---|---|---|---|---|---|---|---|---|---|---|---|
| | | | 0 | 25 | 50 | 75 | 100 | 150 | 200 | 250 | 300 | 350 | 400 | 500 | | | FLC Amps | Input kW |
| SH100-1ECL | 3496 | m³/s | 0.118 | 0.115 | 0.113 | 0.110 | 0.107 | 0.102 | 0.097 | 0.092 | 0.087 | 0.081 | 0.075 | 0.061 | 31.0 | N50 | 1.14 | 0.140 |
| | | W/(L/s) | 1.15 | 1.18 | 1.21 | 1.24 | 1.27 | 1.33 | 1.39 | 1.45 | 1.52 | 1.61 | 1.71 | 2.03 | | | | |
| SH125-1ECL | 3480 | m³/s | 0.133 | 0.131 | 0.129 | 0.126 | 0.124 | 0.120 | 0.115 | 0.109 | 0.103 | 0.097 | 0.089 | 0.071 | 35.2 | N53 | 1.14 | 0.136 |
| | | W/(L/s) | 1.00 | 1.01 | 1.03 | 1.04 | 1.06 | 1.10 | 1.14 | 1.20 | 1.27 | 1.36 | 1.47 | 1.85 | | | | |
| SH150-1ECL | 3458 | m³/s | 0.159 | 0.155 | 0.152 | 0.149 | 0.146 | 0.140 | 0.134 | 0.127 | 0.121 | 0.114 | 0.106 | 0.087 | 38.1 | N57 | 1.2 | 0.142 |
| | | W/(L/s) | 0.77 | 0.81 | 0.85 | 0.89 | 0.92 | 0.99 | 1.05 | 1.11 | 1.18 | 1.25 | 1.33 | 1.55 | | | | |
| SH200-1ECL | 3400 | m³/s | 0.291 | 0.287 | 0.282 | 0.277 | 0.272 | 0.259 | 0.245 | 0.229 | 0.213 | 0.197 | 0.182 | 0.154 | 38.7 | N55 | 1.83 | 0.235 |
| | | W/(L/s) | 0.79 | 0.80 | 0.81 | 0.82 | 0.84 | 0.88 | 0.94 | 1.01 | 1.09 | 1.18 | 1.28 | 1.51 | | | | |
| SH250-1ECL | 3334 | m³/s | 0.314 | 0.310 | 0.305 | 0.301 | 0.296 | 0.285 | 0.273 | 0.260 | 0.245 | 0.228 | 0.209 | 0.165 | 41.7 | N58 | 1.85 | 0.235 |
| | | W/(L/s) | 0.68 | 0.70 | 0.71 | 0.73 | 0.74 | 0.78 | 0.82 | 0.87 | 0.94 | 1.02 | 1.12 | 1.41 | | | | |
| SH315-1ECL | 2402 | m³/s | 0.372 | 0.358 | 0.346 | 0.334 | 0.322 | 0.298 | 0.271 | 0.239 | 0.203 | 0.169 | 0.142 | 0.104 | 36.5 | N54 | 1.91 | 0.248 |
| | | W/(L/s) | 0.57 | 0.59 | 0.60 | 0.62 | 0.64 | 0.68 | 0.74 | 0.82 | 0.95 | 1.14 | 1.37 | 1.95 | | | | |

Overall total efficiency, r/min and FMEG values are per ISO 12759 installation category D. FLC Amps @ 230V / 50Hz.
A variable speed drive is integrated within the fan.

### SINGLE Phase - 220V-240V / 50Hz
### AC Motors

| Product Code | Speed r/min | Airflow SFP | Airflow m³/s @ Static Pressure Pa. | | | | | | | | | | | | Overall Efficiency % | FMEG | Motor Electrical Data | |
|---|---|---|---|---|---|---|---|---|---|---|---|---|---|---|---|---|---|---|
| | | | 0 | 25 | 50 | 75 | 100 | 150 | 200 | 250 | 300 | 350 | 400 | 500 | | | FLC Amps | Input kW |
| SH100-1ACL | 2518 | m³/s | 0.076 | 0.075 | 0.073 | 0.071 | 0.069 | 0.064 | 0.056 | 0.043 | 0.031 | 0.018 | | | 20.7 | - | 0.28 | 0.064 |
| | | W/(L/s) | 0.82 | 0.84 | 0.86 | 0.88 | 0.91 | 0.98 | 1.12 | 1.40 | 1.86 | 3.00 | | | | | | |
| SH125-1ACL | 2502 | m³/s | 0.094 | 0.092 | 0.090 | 0.087 | 0.085 | 0.078 | 0.068 | 0.054 | 0.036 | 0.016 | | | 23.6 | - | 0.28 | 0.064 |
| | | W/(L/s) | 0.67 | 0.69 | 0.71 | 0.73 | 0.76 | 0.82 | 0.94 | 1.15 | 1.61 | 3.26 | | | | | | |
| SH150-1ACL | 2510 | m³/s | 0.118 | 0.113 | 0.109 | 0.104 | 0.099 | 0.087 | 0.073 | 0.056 | 0.034 | 0.007 | | | 24.4 | - | 0.28 | 0.064 |
| | | W/(L/s) | 0.53 | 0.55 | 0.58 | 0.61 | 0.64 | 0.73 | 0.86 | 1.11 | 1.74 | 6.68 | | | | | | |
| SH200-1ACL | 2456 | m³/s | 0.203 | 0.198 | 0.193 | 0.187 | 0.181 | 0.164 | 0.140 | 0.113 | 0.086 | 0.063 | | | 28.7 | - | 0.46 | 0.104 |
| | | W/(L/s) | 0.48 | 0.50 | 0.52 | 0.54 | 0.56 | 0.63 | 0.74 | 0.92 | 1.17 | 1.53 | | | | | | |
| SH250-1ACL | 2506 | m³/s | 0.239 | 0.232 | 0.224 | 0.215 | 0.205 | 0.184 | 0.161 | 0.136 | 0.111 | 0.084 | 0.055 | | 25.5 | N45 | 0.60 | 0.137 |
| | | W/(L/s) | 0.53 | 0.55 | 0.58 | 0.61 | 0.64 | 0.73 | 0.84 | 1.00 | 1.22 | 1.59 | 2.33 | | | | | |
| SH315-1ACL | 2243 | m³/s | 0.334 | 0.326 | 0.317 | 0.306 | 0.295 | 0.268 | 0.235 | 0.201 | 0.168 | 0.138 | 0.110 | 0.048 | 24.5 | N42 | 0.94 | 0.213 |
| | | W/(L/s) | 0.54 | 0.56 | 0.59 | 0.62 | 0.66 | 0.76 | 0.88 | 1.05 | 1.24 | 1.47 | 1.77 | 3.34 | | | | |

Overall total efficiency, r/min and FMEG values are per ISO 12759 installation category D.

# Hideaway SH

## Performance Curves

### Hideaway SH - EC Motors

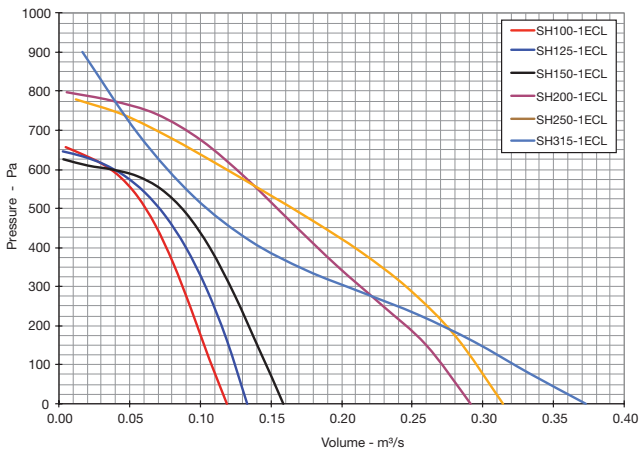


### Hideaway SH - AC Motors

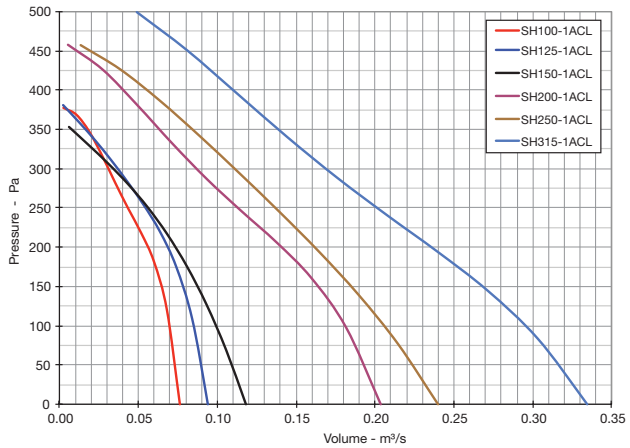


## Sound Data

SINGLE Phase - 200V-277V / 50Hz / 60Hz
EC Motors

| Product Code | | Sound Power Level dBW @ Octave Band Hz | | | | | | | | dBA @ 3m |
|---|---|---|---|---|---|---|---|---|---|---|
| | | 63Hz | 125Hz | 250Hz | 500Hz | 1 kHz | 2 kHz | 4 kHz | 8 kHz | |
| SH100-1ECL | Inlet | 76 | 79 | 85 | 78 | 56 | 52 | 44 | 43 | 58 |
| | Outlet | 81 | 81 | 84 | 79 | 65 | 56 | 48 | 43 | 58 |
| | Breakout | 58 | 62 | 72 | 69 | 57 | 53 | 47 | 45 | 48 |
| SH125-1ECL | Inlet | 84 | 81 | 86 | 81 | 58 | 55 | 48 | 51 | 60 |
| | Outlet | 86 | 79 | 87 | 81 | 67 | 59 | 51 | 50 | 61 |
| | Breakout | 57 | 61 | 76 | 75 | 62 | 57 | 50 | 50 | 53 |
| SH150-1ECL | Inlet | 86 | 79 | 85 | 81 | 58 | 56 | 49 | 46 | 60 |
| | Outlet | 85 | 81 | 86 | 80 | 66 | 60 | 55 | 53 | 60 |
| | Breakout | 59 | 61 | 78 | 75 | 61 | 56 | 50 | 49 | 54 |
| SH200-1ECL | Inlet | 87 | 80 | 86 | 80 | 63 | 58 | 53 | 52 | 60 |
| | Outlet | 90 | 84 | 90 | 82 | 69 | 65 | 58 | 57 | 63 |
| | Breakout | 64 | 70 | 83 | 79 | 65 | 61 | 56 | 57 | 58 |
| SH250-1ECL | Inlet | 79 | 77 | 85 | 78 | 63 | 59 | 56 | 55 | 58 |
| | Outlet | 89 | 84 | 86 | 78 | 69 | 65 | 60 | 59 | 60 |
| | Breakout | 63 | 67 | 79 | 77 | 66 | 60 | 53 | 53 | 56 |
| SH315-1ECL | Inlet | 77 | 75 | 82 | 63 | 57 | 51 | 52 | 52 | 53 |
| | Outlet | 78 | 75 | 79 | 68 | 63 | 59 | 54 | 55 | 52 |
| | Breakout | 64 | 64 | 78 | 69 | 63 | 56 | 49 | 49 | 51 |

# Hideaway SH

## Sound Data

SINGLE Phase - 220V-240V / 50Hz
AC Motors

| Product Code | | Sound Power Level dBW @ Octave Band Hz | | | | | | | | dBA @ 3m |
|---|---|---|---|---|---|---|---|---|---|---|
| | | 63Hz | 125Hz | 250Hz | 500Hz | 1 kHz | 2 kHz | 4 kHz | 8 kHz | |
| SH100-1ACL | Inlet | 70 | 72 | 79 | 66 | 49 | 44 | 39 | 35 | 50 |
| | Outlet | 73 | 75 | 78 | 66 | 54 | 47 | 44 | 39 | 50 |
| | Breakout | 49 | 58 | 68 | 61 | 52 | 48 | 42 | 41 | 42 |
| SH125-1ACL | Inlet | 74 | 74 | 80 | 70 | 51 | 47 | 37 | 31 | 52 |
| | Outlet | 75 | 72 | 81 | 68 | 56 | 49 | 44 | 40 | 52 |
| | Breakout | 47 | 54 | 67 | 61 | 53 | 47 | 41 | 40 | 41 |
| SH150-ACL | Inlet | 74 | 72 | 80 | 68 | 49 | 48 | 43 | 38 | 52 |
| | Outlet | 76 | 75 | 82 | 69 | 55 | 51 | 47 | 43 | 54 |
| | Breakout | 49 | 55 | 71 | 63 | 54 | 49 | 41 | 39 | 44 |
| SH200-1ACL | Inlet | 77 | 78 | 83 | 70 | 56 | 51 | 49 | 45 | 55 |
| | Outlet | 81 | 78 | 85 | 71 | 58 | 55 | 49 | 42 | 56 |
| | Breakout | 56 | 65 | 78 | 67 | 56 | 52 | 46 | 41 | 50 |
| SH250-1ACL | Inlet | 76 | 78 | 82 | 69 | 58 | 53 | 53 | 53 | 54 |
| | Outlet | 80 | 78 | 81 | 72 | 63 | 58 | 54 | 55 | 54 |
| | Breakout | 59 | 65 | 75 | 67 | 58 | 51 | 44 | 45 | 48 |
| SH315-1ACL | Inlet | 75 | 74 | 79 | 61 | 55 | 49 | 50 | 51 | 50 |
| | Outlet | 74 | 74 | 79 | 66 | 61 | 56 | 52 | 52 | 51 |
| | Breakout | 55 | 60 | 75 | 63 | 57 | 49 | 41 | 39 | 47 |

Tests and preparation of the sound data have been carried out in accordance with BS 848 Part 2:1985 at 50% peak pressure.
The In-Duct Sound Power Level Spectra are in dB re-1pW.
The overall A-weighted sound pressure level is at a distance of 3m with spherical free-field propagation. It is expressed in dB re-20µPa and is presented for comparative purposes only.

## Dimensional Data

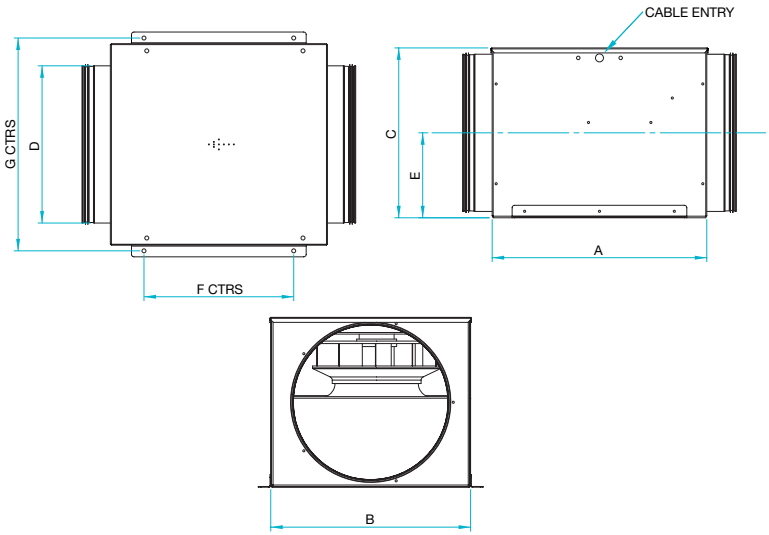


| Product Code | A | B | C | D | E | F | G | Weight kg |
|---|---|---|---|---|---|---|---|---|
| SH100 | 400 | 300 | 166 | 100 | 83 | 300 | 325 | 10 |
| SH125 | 400 | 300 | 166 | 125 | 83 | 300 | 325 | 10 |
| SH150 | 400 | 300 | 182 | 150 | 91 | 300 | 325 | 10 |
| SH200 | 424 | 350 | 231 | 200 | 115.5 | 300 | 375 | 12 |
| SH250 | 452 | 350 | 281 | 250 | 140 | 300 | 375 | 14 |
| SH315 | 430 | 400 | 340 | 315 | 170 | 300 | 426 | 16 |

All dimensions are expressed in mm.

# Hideaway SH

## Silencer Data

SINGLE Phase - 200V-277V / 50Hz / 60Hz
EC Motors

| Product Code | | dBA Attenuation | | | |
|---|---|---|---|---|---|
| | | 300L | 600L | 900L | 1200L |
| SH100-1ECL | Inlet | -11 | -17 | -22 | -24 |
| | Outlet | -11 | -17 | -22 | -24 |
| SH125-1ECL | Inlet | -10 | -16 | -20 | -23 |
| | Outlet | -10 | -15 | -20 | -23 |
| SH150-1ECL | Inlet | -9 | -15 | -18 | -20 |
| | Outlet | -8 | -14 | -17 | -20 |
| SH200-1ECL | Inlet | -8 | -12 | -16 | -19 |
| | Outlet | -7 | -12 | -16 | -19 |
| SH250-1ECL | Inlet | -8 | -12 | -14 | -17 |
| | Outlet | -7 | -11 | -13 | -16 |
| SH315-1ECL | Inlet | -6 | -8 | -10 | -14 |
| | Outlet | -7 | -9 | -11 | -15 |

SINGLE Phase - 220V-240V / 50Hz
AC Motors

| Product Code | | dBA Attenuation | | | |
|---|---|---|---|---|---|
| | | 300L | 600L | 900L | 1200L |
| SH100-1ACL | Inlet | -9 | -15 | -21 | -23 |
| | Outlet | -9 | -15 | -20 | -22 |
| SH125-1ACL | Inlet | -9 | -14 | -19 | -22 |
| | Outlet | -8 | -14 | -18 | -21 |
| SH150-1ACL | Inlet | -7 | -13 | -16 | -18 |
| | Outlet | -7 | -12 | -15 | -18 |
| SH200-1ACL | Inlet | -6 | -10 | -14 | -17 |
| | Outlet | -6 | -10 | -14 | -17 |
| SH250-1ACL | Inlet | -6 | -10 | -12 | -15 |
| | Outlet | -7 | -11 | -13 | -16 |
| SH315-1ACL | Inlet | -6 | -8 | -10 | -14 |
| | Outlet | -7 | -9 | -11 | -15 |

## Wiring Data

**Please see our Wiring Diagrams download on www.eltaselect.com for more information.**

SINGLE Phase - 220V-240V / 50Hz
EC Motors

| Product Code | Wiring Diagram No. |
|---|---|
| SH100-1ECL | 152-00036 |
| SH125-1ECL | 152-00036 |
| SH150-1ECL | 152-00036 |
| SH200-1ECL | 152-00036 |
| SH250-1ECL | 152-00036 |
| SH315-1ECL | 152-00036 |

SINGLE Phase - 220V-240V / 50Hz
AC Motors

| Product Code | Wiring Diagram No. |
|---|---|
| SH100-1ACL | 152-177 |
| SH125-1ACL | 152-177 |
| SH150-1ACL | 152-177 |
| SH200-1ACL | 152-177 |
| SH250-1ACL | 152-177 |
| SH315-1ACL | 152-177 |

# Hideaway SH

## Accessories

**Please see our Centrifugal Accessories download on www.eltaselect.com for more information.**

SINGLE Phase - 220V-277V / 50Hz / 60Hz
EC Motors

| Product Code | Electronic Controller | Flexible Connections (each) | Clamps (each) | Damper | Panel Filter | Electric Heater Battery |
|---|---|---|---|---|---|---|
| **SH100-1ECL** | 149-POT-10 | 018-0100-FLEX | 018-100-CLAMP | 018-100-DAMPER | 018-0100-FILT-P | 018-0100-HEAT-1 |
| **SH125-1ECL** | 149-POT-10 | 018-0125-FLEX | 018-125-CLAMP | 018-125-DAMPER | 018-0125-FILT-P | 018-0125-HEAT-1 |
| **SH150-1ECL** | 149-POT-10 | 018-0150-FLEX | 018-150-CLAMP | 018-150-DAMPER | 018-0150-FILT-P | 018-0150-HEAT-1 |
| **SH200-1ECL** | 149-POT-10 | 018-0200-FLEX | 018-200-CLAMP | 018-200-DAMPER | 018-0200-FILT-P | 018-0200-HEAT-1 |
| **SH250-1ECL** | 149-POT-10 | 018-0250-FLEX | 018-250-CLAMP | 018-250-DAMPER | 018-0250-FILT-P | 018-0250-HEAT-1 |
| **SH315-1ECL** | 149-POT-10 | 018-0315-FLEX | 018-315-CLAMP | 018-315-DAMPER | 018-0315-FILT-P | 018-0315-HEA1/3 |

| Product Code | Silencer 300mm Long | Silencer 600mm Long | Silencer 900mm Long | Silencer 1200mm Long |
|---|---|---|---|---|
| **SH100-1ECL** | 068-0100-JF1 | 068-0100-JF2 | 068-0100-JF3 | 068-0100-JF4 |
| **SH125-1ECL** | 068-0125-JF1 | 068-0125-JF2 | 068-0125-JF3 | 068-0125-JF4 |
| **SH150-1ECL** | 068-0150-JF1 | 068-0150-JF2 | 068-0150-JF3 | 068-0150-JF4 |
| **SH200-1ECL** | 068-0200-JF1 | 068-0200-JF2 | 068-0200-JF3 | 068-0200-JF4 |
| **SH250-1ECL** | 068-0250-JF1 | 068-0250-JF2 | 068-0250-JF3 | 068-0250-JF4 |
| **SH315-1ECL** | 068-0315-JF1 | 068-0315-JF2 | 068-0315-JF3 | 068-0315-JF4 |

SINGLE Phase - 220V-240V / 50Hz
AC Motors

| Product Code | Electronic Controller | Flexible Connections (each) | Clamps (each) | Damper | Panel Filter | Electric Heater Battery |
|---|---|---|---|---|---|---|
| **SH100-1ACL** | 149-EL21 | 018-0100-FLEX | 018-100-CLAMP | 018-100-DAMPER | 018-0100-FILT-P | 018-0100-HEAT-1 |
| **SH125-1ACL** | 149-EL21 | 018-0125-FLEX | 018-125-CLAMP | 018-125-DAMPER | 018-0125-FILT-P | 018-0125-HEAT-1 |
| **SH150-1ACL** | 149-EL21 | 018-0150-FLEX | 018-150-CLAMP | 018-150-DAMPER | 018-0150-FILT-P | 018-0150-HEAT-1 |
| **SH200-1ACL** | 149-EL21 | 018-0200-FLEX | 018-200-CLAMP | 018-200-DAMPER | 018-0200-FILT-P | 018-0200-HEAT-1 |
| **SH250-1ACL** | 149-EL21 | 018-0250-FLEX | 018-250-CLAMP | 018-250-DAMPER | 018-0250-FILT-P | 018-0250-HEAT-1 |
| **SH315-1ACL** | 149-EL21 | 018-0315-FLEX | 018-315-CLAMP | 018-315-DAMPER | 018-0315-FILT-P | 018-0315-HEA1/3 |

| Product Code | Silencer 300mm Long | Silencer 600mm Long | Silencer 900mm Long | Silencer 1200mm Long |
|---|---|---|---|---|
| **SH100-1ACL** | 068-0100-JF1 | 068-0100-JF2 | 068-0100-JF3 | 068-0100-JF4 |
| **SH125-1ACL** | 068-0125-JF1 | 068-0125-JF2 | 068-0125-JF3 | 068-0125-JF4 |
| **SH150-1ACL** | 068-0150-JF1 | 068-0150-JF2 | 068-0150-JF3 | 068-0150-JF4 |
| **SH200-1ACL** | 068-0200-JF1 | 068-0200-JF2 | 068-0200-JF3 | 068-0200-JF4 |
| **SH250-1ACL** | 068-0250-JF1 | 068-0250-JF2 | 068-0250-JF3 | 068-0250-JF4 |
| **SH315-1ACL** | 068-0315-JF1 | 068-0315-JF2 | 068-0315-JF3 | 068-0315-JF4 |

## BUILDING SERVICES

**Tel:** +44 (0) 1384 275800
**Fax:** +44 (0) 1384 275810
**e-mail:** bs@eltafans.co.uk

46 Third Avenue
Pensnett Trading Estate
Kingswinford, West Midlands
DY6 7US, United Kingdom

## APPLIED TECHNOLOGY

**Tel:** +44 (0) 1489 566500
**Fax:** +44 (0) 1489 566555
**e-mail:** at@eltafans.co.uk

17 Barnes Wallis Road
Segnesworth East Industrial Estate
Fareham, Hampshire
PO15 5ST, United Kingdom

## EXPORT

**Tel:** +44 (0) 1489 566500
**Fax:** +44 (0) 1489 566555
**e-mail:** export@eltafans.co.uk

17 Barnes Wallis Road
Segnesworth East Industrial Estate
Fareham, Hampshire
PO15 5ST, United Kingdom

**www.eltafans.com**

BS EN ISO 9001:2008
FM 556465

A member of
HEVAC ASSOCIATION

PATRONS

A member of ELTA GROUP LIMITED