ELTA SELECT

Quietflow SQS

Product Brochure

t: **01384 275800**
f: **01384 275810**
e: **bs@eltafans.co.uk**
visit: **eltaselect.com**

Quietflow SQS

Centrifugal Box Fan

centrifugal

OVERVIEW

The Quietflow SQS...EC incorporates the BAT (Best Available Technology) Vpro backward curved impeller, with three dimensional profiled blades powered by the ultra reliable Ziehl-Abegg EC (electronically commutated) external rotor motor. The range of acoustically treated single in-line fans are suitable for internal mounting, manufactured in galvanised steel with a natural finish.

MORE INFORMATION		AC	EC
		PAGE NO.	
Performance, SFP & Electrical Data	1Ph	3	7
	3Ph	5	11
Sound Data	1Ph	4	9
	3Ph	5	12
Accessories & Wiring Data	All	6	13
Optimum Energy Efficiency Point	All	6	13
Dimensional Data	All	14	

QUICK FACTS

- ✓ 11 sizes from 100mm to 710mm.
- ✓ Air volume flow rates up to 4.31 m³/s (AC) and 4.4 m³/s (EC).
- ✓ Static pressures up to 1179 Pa (AC) and 1202 Pa (EC).
- ✓ Suitable for operating temperatures up to +60°C.
- ✓ Robust galvanised sheet steel casing.

CASING

The robust 1.2mm galvanised mild steel sheet casing, is treated internally with a Class O rated (BS 476 Parts 6 and 7) fire resistant acoustic foam lining with a fire resistant polymeric coating. The wrap around folded casing is specially manufactured using integral motor mounting plates to provide additional rigidity for the casings.

Each casing provides spigots to suit standard circular ducting. EPDM (Ethylene Propylene) rubber U shaped seals (being ozone and UV stable) are used to ensure a good seal back to the duct that is to be attached. A removable lid is provided as a standard feature to facilitate ease of maintenance and cleaning.

IMPELLER

High efficiency low tonal noise backward curved centrifugal impeller. Dynamically balanced to ISO 14694 Grade G6.3 and directly driven by the motor to provide a smooth airflow through the unit.

MOTORS

The single range of units may have either an EC or AC external rotor motor fitted as standard. The motor contains sealed for life bearings. Thermal Class of motors to THCL 130 or 155 dependent on size.

Manufactured by Ziehl-Abegg providing increased reliability

All motors are suitable for use in ambient air conditions up to +60°C.

Electrical connection shall be via an IP55 terminal box mounted on the side for easy customer connection.

QUALITY MANAGEMENT

Units are to be designed and manufactured with procedures as defined in BS EN ISO 9001:2008.

All SQS units are to be tested to ISO 5801:2007 (airside performance) and BS 848 Part 2:1985 (sound performance).

TYPICAL APPLICATIONS

- Toilets
- Bathrooms
- Hotels
- Schools
- Colleges
- Libraries

Elta Fans Limited has a policy of continuous product development and improvement and therefore reserves the right to supply products which may differ from those illustrated and described in this publication. Confirmation of dimensions and data will be supplied on request.

Quietflow SQS

Performance, SFP & Electrical Data

AC

SINGLE Phase - 220V to 240V / 50Hz

Product Code	Speed r/min	Airflow SFP	Airflow m³/s @ Static Pressure Pa.												Overall Efficiency %	FMEG	Motor Electrical Data		dBA @ 3m	
			0	25	50	75	100	150	200	250	300	350	400	500			FLC Amps	Input kW		
SQS100-1ACL	2545	m³ / s	0.081	0.078	0.076	0.073	0.070	0.062	0.051	0.039	0.025	0.009			19.6	-	0.34	0.063	Inlet	43
																			Outlet	45
		W / (L/s)	0.79	0.81	0.83	0.86	0.90	0.99	1.16	1.45	2.08	5.50							Breakout	39
SQS125-1ACL	2526	m³ / s	0.101	0.096	0.092	0.087	0.082	0.071	0.059	0.045	0.027	0.005			20.7	-	0.35	0.065	Inlet	45
																			Outlet	45
		W / (L/s)	0.65	0.68	0.71	0.74	0.78	0.89	1.04	1.31	1.99	8.87							Breakout	38
SQS150-1ACL	2515	m³ / s	0.130	0.122	0.114	0.106	0.099	0.084	0.069	0.052	0.031	0.007			22.6	-	0.35	0.066	Inlet	51
																			Outlet	52
		W / (L/s)	0.47	0.51	0.56	0.61	0.66	0.77	0.93	1.18	1.79	6.85							Breakout	39
SQS200-1ACL	2504	m³ / s	0.240	0.228	0.217	0.205	0.194	0.172	0.150	0.128	0.107	0.084	0.061		24.5	N44	0.66	0.141	Inlet	47
																			Outlet	46
		W / (L/s)	0.56	0.60	0.64	0.68	0.72	0.82	0.93	1.07	1.26	1.53	2.03						Breakout	41
SQS250-1ACL	2449	m³ / s	0.335	0.326	0.317	0.307	0.296	0.270	0.241	0.210	0.180	0.152	0.125	0.075	26.4	N44	0.99	0.217	Inlet	50
																			Outlet	49
		W / (L/s)	0.59	0.62	0.64	0.67	0.71	0.79	0.89	1.02	1.18	1.35	1.57	2.33					Breakout	43
SQS315-1ACL	1289	m³ / s	0.394	0.376	0.356	0.331	0.300	0.219	0.133	0.054					19.7	N38	0.84	0.179	Inlet	40
																			Outlet	40
		W / (L/s)	0.45	0.47	0.50	0.54	0.59	0.79	1.22	2.75									Breakout	33
SQS400-1ACL	1378	m³ / s	0.682	0.662	0.641	0.618	0.593	0.535	0.462	0.364	0.230	0.089			34.2	N50	1.50	0.293	Inlet	43
																			Outlet	42
		W / (L/s)	0.37	0.39	0.42	0.44	0.47	0.54	0.62	0.75	1.04	2.15							Breakout	39
SQS500-1ACL	1216	m³ / s	1.235	1.208	1.179	1.147	1.113	1.034	0.940	0.831	0.711	0.584	0.454	0.173	34.5	N47	2.97	0.642	Inlet	42
																			Outlet	43
		W / (L/s)	0.47	0.49	0.51	0.53	0.55	0.61	0.68	0.77	0.89	1.05	1.28	2.69					Breakout	47

Overall total efficiency, r/min and FMEG values are per ISO 12759 installation category D. FLC Amps @ 230V / 1Ph / 50Hz.
Data provided at standard air density of 1.2 kg/m³.
The overall A-weighted sound pressure level is at a distance of 3m with spherical free-field propagation. It is expressed in dB re-20μPa and is presented for comparative purposes only.

Elta Fans Limited has a policy of continuous product development and improvement and therefore reserves the right to supply products which may differ from those illustrated and described in this publication. Confirmation of dimensions and data will be supplied on request.

Quietflow SQS

Sound Data

AC

SINGLE Phase - 220V to 240V / 50Hz

Product Code		Sound Power Level dBW @ Octave Band Hz								Total dB	Silencer dBA Attenuation			
		63Hz	125Hz	250Hz	500Hz	1 kHz	2 kHz	4 kHz	8 kHz		300L	600L	900L	1200L
SQS100-1ACL	Inlet	68	71	71	53	46	40	39	32	75	-8	-13	-18	-20
	Outlet	76	74	72	60	49	41	41	31	79	-8	-12	-18	-20
	Breakout	56	68	66	51	48	43	41	39	70	-	-	-	-
SQS125-1ACL	Inlet	69	71	74	54	47	41	38	36	77	-7	-12	-17	-20
	Outlet	75	69	73	59	48	43	41	33	78	-8	-12	-17	-20
	Breakout	53	61	65	52	51	43	38	34	67	-	-	-	-
SQS150-1ACL	Inlet	67	65	80	53	48	42	40	39	80	-6	-12	-15	-17
	Outlet	77	68	81	60	49	44	43	35	83	-6	-12	-15	-17
	Breakout	53	57	67	53	50	43	38	35	68	-	-	-	-
SQS200-1ACL	Inlet	73	73	76	59	52	46	44	41	79	-6	-10	-14	-17
	Outlet	77	75	74	61	52	49	43	38	80	-6	-9	-13	-16
	Breakout	58	64	68	57	53	50	46	43	70	-	-	-	-
SQS250-1ACL	Inlet	74	77	79	62	53	49	46	44	82	-6	-10	-12	-14
	Outlet	75	73	78	62	53	50	45	40	81	-6	-10	-12	-15
	Breakout	61	68	70	59	53	47	41	39	73	-	-	-	-
SQS315-1ACL	Inlet	69	76	61	50	38	39	37	29	77	-3	-5	-7	-10
	Outlet	70	75	61	52	47	37	34	27	76	-4	-6	-8	-10
	Breakout	58	64	57	51	45	38	32	27	66	-	-	-	-
SQS400-1ACL	Inlet	72	78	65	55	48	45	43	41	79	-3	-5	-7	-9
	Outlet	75	75	65	60	52	43	39	35	78	-4	-6	-8	-11
	Breakout	65	70	64	57	50	44	39	37	72	-	-	-	-
SQS500-1ACL	Inlet	74	74	63	58	52	50	46	49	77	-	-	-	-
	Outlet	74	74	67	60	53	47	41	39	78	-	-	-	-
	Breakout	75	80	69	64	55	47	40	38	82	-	-	-	-

Tests and preparation of the sound data have been carried out in accordance with BS 848 Part 2:1985 at 50% peak pressure.
The Sound Power Level Spectra are in dB re-1pW.

Elta Fans Limited has a policy of continuous product development and improvement and therefore reserves the right to supply products which may differ from those illustrated and described in this publication.
Confirmation of dimensions and data will be supplied on request.

Quietflow SQS

Performance, SFP & Electrical Data

AC

THREE Phase - 380V to 415V / 50Hz

Product Code	Speed r/min	Airflow SFP	Airflow m³/s @ Static Pressure Pa.												Overall Efficiency %	FMEG	Motor Electrical Data			dBA @ 3m	
			0	25	50	75	100	150	200	250	300	350	400	500			FLC Amps	Input kW	△ / Y		
SQS560-3ACL	1334	m³ / s	**1.89**	**1.86**	**1.83**	**1.80**	**1.76**	**1.70**	**1.62**	**1.54**	**1.46**	**1.36**	**1.26**	**1.00**	41.4	N50	2.41	1.32	3 Ph △	Inlet	49
																				Outlet	50
		W / (L/s)	0.64	0.65	0.67	0.69	0.71	0.75	0.79	0.84	0.89	0.96	1.03	1.24						Breakout	-
	1067	m³ / s	**1.52**	**1.48**	**1.43**	**1.39**	**1.34**	**1.24**	**1.12**	**0.99**	**0.85**	**0.71**	**0.56**	**0.28**	30.2		1.48	0.90	3 Ph Y	Inlet	44
																				Outlet	46
		W / (L/s)	0.56	0.58	0.60	0.63	0.66	0.72	0.80	0.89	1.02	1.19	1.42	2.34						Breakout	-
SQS630-3ACL	1174	m³ / s	**2.54**	**2.49**	**2.44**	**2.40**	**2.35**	**2.24**	**2.14**	**2.02**	**1.90**	**1.76**	**1.62**	**1.31**	38.9	N46	3.44	1.79	3 Ph △	Inlet	49
																				Outlet	52
		W / (L/s)	0.60	0.62	0.64	0.67	0.69	0.74	0.79	0.85	0.92	1.00	1.09	1.32						Breakout	-
	779	m³ / s	**1.72**	**1.66**	**1.58**	**1.50**	**1.41**	**1.19**	**0.96**	**0.74**	**0.57**	**0.42**	**0.30**	**0.11**	24.2		1.60	0.83	3 Ph Y	Inlet	41
																				Outlet	41
		W / (L/s)	0.46	0.48	0.51	0.54	0.58	0.69	0.85	1.07	1.35	1.72	2.27	5.39						Breakout	-
SQS710-3ACL	1368	m³ / s	**4.31**	**4.26**	**4.21**	**4.16**	**4.10**	**4.00**	**3.90**	**3.79**	**3.69**	**3.58**	**3.47**	**3.25**	49.2	N53	6.68	4.17	3 Ph △	Inlet	56
																				Outlet	58
		W / (L/s)	0.83	0.85	0.87	0.90	0.92	0.96	1.00	1.04	1.09	1.13	1.18	1.28						Breakout	-
	1124	m³ / s	**3.60**	**3.54**	**3.48**	**3.42**	**3.36**	**3.23**	**3.09**	**2.94**	**2.79**	**2.63**	**2.46**	**2.10**	36.9		4.67	3.01	3 Ph Y	Inlet	52
																				Outlet	53
		W / (L/s)	0.77	0.79	0.81	0.83	0.85	0.90	0.95	1.01	1.07	1.14	1.22	1.41						Breakout	-

Overall total efficiency, r/min and FMEG values are per ISO 12759 installation category D. FLC Amps @ 400V / 3Ph / 50Hz.
Data provided at standard air density of 1.2 kg/m³.
The overall A-weighted sound pressure level is at a distance of 3m with spherical free-field propagation. It is expressed in dB re-20μPa and is presented for comparative purposes only.

Sound Data

THREE Phase - 380V to 415V / 50Hz

Product Code	Control Voltage		Sound Power Level dBW @ Octave Band Hz								Total dB
			63Hz	125Hz	250Hz	500Hz	1 kHz	2 kHz	4 kHz	8 kHz	
SQS560-3ACL	Δ	Inlet	80	80	68	67	61	60	57	56	83
		Outlet	82	82	75	67	59	55	52	46	86
		Breakout	-	-	-	-	-	-	-	-	-
	Y	Inlet	76	75	63	63	55	54	50	51	79
		Outlet	78	79	70	62	52	49	44	40	82
		Breakout	-	-	-	-	-	-	-	-	-
SQS630-3ACL	Δ	Inlet	83	80	67	67	61	58	54	56	85
		Outlet	84	84	76	68	60	56	52	50	87
		Breakout	-	-	-	-	-	-	-	-	-
	Y	Inlet	85	69	57	56	50	46	49	43	85
		Outlet	83	71	64	56	48	44	42	37	83
		Breakout	-	-	-	-	-	-	-	-	-
SQS710-3ACL	Δ	Inlet	89	85	77	73	70	66	63	64	91
		Outlet	89	90	80	73	73	64	59	55	93
		Breakout	-	-	-	-	-	-	-	-	-
	Y	Inlet	85	84	72	68	65	61	57	61	88
		Outlet	85	85	76	69	64	58	53	51	88
		Breakout	-	-	-	-	-	-	-	-	-

Tests and preparation of the sound data have been carried out in accordance with BS 848 Part 2:1985 at 50% peak pressure.
The Sound Power Level Spectra are in dB re-1pW.

Elta Fans Limited has a policy of continuous product development and improvement and therefore reserves the right to supply products which may differ from those illustrated and described in this publication.
Confirmation of dimensions and data will be supplied on request.

Quietflow SQS

Accessories & Wiring Data

AC

For more information on Accessories & Wiring Diagrams, please see individual product downloads, or visit eltaselect.com/information-centre

SINGLE Phase - 220V to 240V / 50Hz

Product Code	Electronic Controller	Transformer Controller	Flexible Connections (each)	Clamps (each)	AV Mounts (set of 4)	Panel Filter	Electric Heater Battery
SQS100-1ACL	149-EL31	149-TC12	018-0100-FLEX	018-100-CLAMP	062-SEL03	018-0100-FILT-P	018-0100-HEAT-1
SQS125-1ACL	149-EL31	149-TC12	018-0125-FLEX	018-125-CLAMP	062-SEL03	018-0125-FILT-P	018-0125-HEAT-1
SQS150-1ACL	149-EL31	149-TC12	018-0150-FLEX	018-150-CLAMP	062-SEL03	018-0150-FILT-P	018-0150-HEAT-1
SQS200-1ACL	149-EL31	149-TC12	018-0200-FLEX	018-200-CLAMP	062-SEL03	018-0200-FILT-P	018-0200-HEAT-1
SQS250-1ACL	149-EL31	149-TC12	018-0250-FLEX	018-250-CLAMP	062-SEL03	018-0250-FILT-P	018-0250-HEAT-1
SQS315-1ACL	149-EL31	149-TC12	018-0315-FLEX	018-315-CLAMP	062-SEL03	018-0315-FILT-P	018-0315-HEA1/3
SQS400-1ACL	149-EL31TK	149-TC12	018-0400-FLEX	018-400-CLAMP	062-SEL04	018-0400-FILT-P	018-0400-HEA1/3
SQS500-1ACL	149-EL61TK	149-TC14	018-0500-FLEX	018-500-CLAMP	062-SEL05	018-0500-FILT-P	018-0500-HEAT-3
							018-0500-HEAT-4

Product Code	Silencer 300mm Long	Silencer 600mm Long	Silencer 900mm Long	Silencer 1200mm Long	Wiring Diagram No.
SQS100-1ACL	068-0100-JF1	068-0100-JF2	068-0100-JF3	068-0100-JF4	152-177
SQS125-1ACL	068-0125-JF1	068-0125-JF2	068-0125-JF3	068-0125-JF4	152-177
SQS150-1ACL	068-0150-JF1	068-0150-JF2	068-0150-JF3	068-0150-JF4	152-177
SQS200-1ACL	068-0200-JF1	068-0200-JF2	068-0200-JF3	068-0200-JF4	152-177
SQS250-1ACL	068-0250-JF1	068-0250-JF2	068-0250-JF3	068-0250-JF4	152-177
SQS315-1ACL	068-0315-JF1	068-0315-JF2	068-0315-JF3	068-0315-JF4	152-177
SQS400-1ACL	068-0400-JF1	068-0400-JF2	068-0400-JF3	068-0400-JF4	152-104A
SQS500-1ACL	Please enquire.				152-104A

THREE Phase - 380V to 415V / 50Hz

Product Code	Speed r/min	Transformer Controller	Flexible Connections (each)	Clamps (each)	AV Mounts (set of 4)	Panel Filters	Silencer 300mm Long	Silencer 600mm Long	Silencer 900mm Long	Silencer 1200mm Long	Wiring Diagram No.
SQS560-3ACL	1334	149-TC33	018-0560-FLEX	018-560-CLAMP	062-SEL07	018-0560-FILT-P	Please enquire.				152-108
	1067	149-TC33	018-0560-FLEX	018-560-CLAMP	062-SEL07	018-0560-FILT-P					152-108
SQS630-3ACL	1174	149-TC35	018-0630-FLEX	018-630-CLAMP	062-SEL07	018-0630-FILT-P					152-108
	779	149-TC33	018-0630-FLEX	018-630-CLAMP	062-SEL07	018-0630-FILT-P					152-108
SQS710-3ACL	1368	149-TC310	018-0710-FLEX	018-710-CLAMP	062-SEL07	018-0710-FILT-P					152-108
	1124	149-TC35	018-0710-FLEX	018-710-CLAMP	062-SEL07	018-0710-FILT-P					152-108

Optimum Energy Efficiency Point

SINGLE Phase - 220V to 240V / 50Hz

Product Code	Volume m³/s	Pressure Pa	Input kW	Speed r/min	Efficiency %	FMEG
SQS100-1ACL	0.053	221	0.060	2545	19.6	-
SQS125-1ACL	0.058	222	0.062	2526	20.7	-
SQS150-1ACL	0.067	216	0.064	2515	22.6	-
SQS200-1ACL	0.115	289	0.136	2504	24.5	N44
SQS250-1ACL	0.162	338	0.208	2449	26.4	N44
SQS315-1ACL	0.244	142	0.176	1289	19.7	N38
SQS400-1ACL	0.407	237	0.282	1378	34.2	N50
SQS500-1ACL	0.716	306	0.635	1216	34.5	N47

Data provided at standard air density of 1.2 kg/m³.
Values are per ISO 12759 installation category D (total).

THREE Phase - 380V to 415V / 50Hz

Product Code	Volume m³/s	Pressure Pa	Input kW	Speed r/min	Efficiency %	FMEG
SQS560-3ACL	1.086	484	1.267	1334	41.4	N50
SQS630-3ACL	1.362	497	1.739	1174	38.9	N46
SQS710-3ACL	2.370	839	4.038	1368	49.2	N53

Elta Fans Limited has a policy of continuous product development and improvement and therefore reserves the right to supply products which may differ from those illustrated and described in this publication. Confirmation of dimensions and data will be supplied on request.

Quietflow SQS

Performance, SFP & Electrical Data

EC

SINGLE Phase - 200V to 277V / 50Hz or 60Hz

Product Code	Control Voltage	Airflow SFP	Airflow m³/s @ Static Pressure Pa.												Overall Efficiency %	FMEG	Motor Electrical Data		dBA @ 3m	
			0	25	50	75	100	150	200	250	300	350	400	500			FLC Amps	Input kW		
SQS100-1ECL	10V	m³ / s	0.112	0.110	0.107	0.105	0.103	0.098	0.093	0.088	0.081	0.075	0.067	0.046	30.2	N50	1.19	0.128	Inlet	51
																			Outlet	50
		W / (L/s)	1.13	1.15	1.18	1.20	1.23	1.28	1.34	1.41	1.49	1.58	1.70	2.10					Breakout	44
	8V	m³ / s	0.100	0.098	0.097	0.095	0.093	0.089	0.084	0.079	0.074	0.069	0.062	0.042	35.5		1.02	0.103	Inlet	48
																			Outlet	50
		W / (L/s)	1.11	1.10	1.08	1.07	1.06	1.06	1.08	1.12	1.19	1.30	1.47	2.28					Breakout	44
	5V	m³ / s	0.063	0.060	0.056	0.052	0.048	0.040	0.031	0.023	0.015	0.009	0.003		26.1		0.37	0.041	Inlet	44
																			Outlet	42
		W / (L/s)	0.44	0.47	0.50	0.54	0.60	0.76	1.02	1.47	2.30	4.17	12.02						Breakout	38
	2V	m³ / s	0.019	0.008											7.8		0.08	0.005	Inlet	*20
																			Outlet	*20
		W / (L/s)	0.21	0.52															Breakout	*20
SQS125-1ECL	10V	m³ / s	0.140	0.137	0.134	0.131	0.127	0.121	0.114	0.106	0.098	0.088	0.078	0.051	31.2	N51	1.23	0.133	Inlet	49
																			Outlet	54
		W / (L/s)	0.93	0.96	0.98	1.00	1.03	1.08	1.14	1.22	1.31	1.42	1.57	2.15					Breakout	43
	8V	m³ / s	0.125	0.121	0.117	0.114	0.110	0.104	0.097	0.090	0.083	0.075	0.066	0.041	33.9		0.94	0.099	Inlet	49
																			Outlet	48
		W / (L/s)	0.80	0.80	0.81	0.82	0.84	0.88	0.94	1.02	1.13	1.27	1.48	2.35					Breakout	42
	5V	m³ / s	0.074	0.070	0.065	0.061	0.055	0.043	0.031	0.022	0.014	0.008	0.003		28.7		0.39	0.041	Inlet	49
																			Outlet	41
		W / (L/s)	0.36	0.38	0.41	0.45	0.50	0.66	0.96	1.49	2.43	4.39	10.81						Breakout	36
	2V	m³ / s	0.024	0.013											11.3		0.08	0.005	Inlet	*20
																			Outlet	*20
		W / (L/s)	0.17	0.31															Breakout	*20
SQS150-1ECL	10V	m³ / s	0.166	0.161	0.157	0.153	0.149	0.140	0.132	0.124	0.116	0.107	0.097	0.073	37.7	N57	1.21	0.141	Inlet	49
																			Outlet	51
		W / (L/s)	0.85	0.87	0.89	0.91	0.93	0.98	1.03	1.08	1.14	1.21	1.30	1.59					Breakout	43
	8V	m³ / s	0.142	0.139	0.134	0.130	0.125	0.114	0.104	0.095	0.086	0.077	0.068	0.046	33.8		0.96	0.102	Inlet	45
																			Outlet	51
		W / (L/s)	0.67	0.67	0.68	0.69	0.71	0.77	0.85	0.96	1.09	1.24	1.43	2.10					Breakout	40
	5V	m³ / s	0.094	0.083	0.074	0.065	0.057	0.043	0.031	0.021	0.011	0.003			29.1		0.35	0.038	Inlet	44
																			Outlet	47
		W / (L/s)	0.29	0.32	0.35	0.40	0.46	0.64	0.94	1.51	2.92	11.01							Breakout	34
	2V	m³ / s	0.029	0.007											6.2		0.08	0.004	Inlet	*20
																			Outlet	*20
		W / (L/s)	0.14	0.59															Breakout	*20
SQS200-1ECL	10V	m³ / s	0.306	0.299	0.291	0.283	0.276	0.261	0.246	0.231	0.215	0.199	0.183	0.148	37.7	N54	2.08	0.239	Inlet	51
																			Outlet	53
		W / (L/s)	0.71	0.73	0.76	0.78	0.81	0.87	0.93	1.01	1.08	1.17	1.28	1.55					Breakout	44
	8V	m³ / s	0.267	0.254	0.243	0.233	0.224	0.207	0.191	0.176	0.161	0.147	0.133	0.104	41.4		1.46	0.167	Inlet	49
																			Outlet	50
		W / (L/s)	0.56	0.58	0.60	0.62	0.64	0.70	0.76	0.83	0.91	1.01	1.14	1.50					Breakout	41
	5V	m³ / s	0.166	0.150	0.134	0.119	0.105	0.081	0.062	0.047	0.034	0.023	0.013		36.1		0.51	0.058	Inlet	43
																			Outlet	43
		W / (L/s)	0.24	0.26	0.29	0.33	0.38	0.51	0.69	0.97	1.43	2.24	4.12						Breakout	35
	2V	m³ / s	0.059	0.025											14.2		009	0.006	Inlet	*20
																			Outlet	*20
		W / (L/s)	0.10	0.23															Breakout	*20

A variable speed drive is integrated within the fan.
Overall total efficiency, r/min and FMEG values are per ISO 12759 installation category D. FLC Amps @ 230V / 1Ph / 50Hz.
Data provided at standard air density of 1.2 kg/m³.
The overall A-weighted sound pressure level is at a distance of 3m with spherical free-field propagation. It is expressed in dB re-20μPa and is presented for comparative purposes only.
* At 2V the average spherical free-field sound pressure levels cannot be accurately measured above the background level in our conventional laboratory facilities. When correctly installed the fan will be inaudible (less than 20dBA).

Elta Fans Limited has a policy of continuous product development and improvement and therefore reserves the right to supply products which may differ from those illustrated and described in this publication. Confirmation of dimensions and data will be supplied on request.

Quietflow SQS

Performance, SFP & Electrical Data

EC

SINGLE Phase - 200V to 277V / 50Hz or 60Hz

Product Code	Control Voltage	Airflow SFP	Airflow m³/s @ Static Pressure Pa.												Overall Efficiency %	FMEG	Motor Electrical Data		dBA @ 3m	
			0	25	50	75	100	150	200	250	300	350	400	500			FLC Amps	Input kW		
SQS250-1ECL	10V	m³ / s	0.344	0.327	0.312	0.298	0.283	0.255	0.225	0.195	0.168	0.145	0.125	0.096	32.8	N51	1.87	0.224	Inlet	49
																			Outlet	48
		W / (L/s)	0.54	0.57	0.59	0.61	0.64	0.70	0.79	0.91	1.07	1.26	1.49	2.02					Breakout	44
	8V	m³ / s	0.270	0.261	0.251	0.239	0.226	0.192	0.154	0.124	0.102	0.084	0.070	0.048	35.3		1.25	0.148	Inlet	47
																			Outlet	46
		W / (L/s)	0.39	0.40	0.42	0.44	0.46	0.54	0.67	0.86	1.07	1.34	1.67	2.65					Breakout	42
	5V	m³ / s	0.174	0.150	0.124	0.097	0.074	0.043	0.024						30.2		0.33	0.039	Inlet	36
																			Outlet	36
		W / (L/s)	0.18	0.20	0.24	0.31	0.41	0.77	1.52										Breakout	26
	2V	m³ / s	0.067	0.019											12.4		0.09	0.007	Inlet	*20
																			Outlet	*20
		W / (L/s)	0.09	0.30															Breakout	*20
SQS315-1ECL	10V	m³ / s	0.629	0.615	0.601	0.586	0.570	0.537	0.501	0.460	0.415	0.363	0.303	0.151	35.4	N50	2.07	0.445	Inlet	54
																			Outlet	53
		W / (L/s)	0.67	0.70	0.72	0.74	0.77	0.82	0.89	0.96	1.04	1.15	1.29	1.97					Breakout	48
	8V	m³ / s	0.503	0.482	0.459	0.436	0.411	0.358	0.299	0.230	0.150	0.052			33.3		1.08	0.228	Inlet	48
																			Outlet	47
		W / (L/s)	0.44	0.46	0.49	0.52	0.55	0.63	0.73	0.88	1.16	2.43							Breakout	41
	5V	m³ / s	0.294	0.268	0.231	0.173	0.102								25.9		0.33	0.064	Inlet	39
																			Outlet	35
		W / (L/s)	0.21	0.24	0.28	0.35	0.53												Breakout	28
	2V	m³ / s	0.098												4.4		0.10	0.015	Inlet	*20
																			Outlet	*20
		W / (L/s)	0.15																Breakout	*20
SQS400-1ECL	10V	m³ / s	1.051	1.041	1.031	1.021	1.010	0.988	0.963	0.936	0.906	0.872	0.831	0.724	44.3	N55	4.39	0.954	Inlet	55
																			Outlet	56
		W / (L/s)	0.76	0.77	0.79	0.80	0.82	0.86	0.89	0.94	0.98	1.04	1.10	1.28					Breakout	52
	8V	m³ / s	0.835	0.824	0.811	0.798	0.784	0.752	0.714	0.664	0.598	0.514	0.428	0.245	42.9		2.39	0.503	Inlet	49
																			Outlet	50
		W / (L/s)	0.50	0.52	0.53	0.55	0.57	0.61	0.66	0.73	0.82	0.94	1.08	1.56					Breakout	46
	5V	m³ / s	0.506	0.479	0.449	0.414	0.371	0.238							36.9		0.61	0.128	Inlet	40
																			Outlet	38
		W / (L/s)	0.22	0.25	0.27	0.30	0.34	0.51											Breakout	34
	2V	m³ / s	0.164												3.5		0.20	0.052	Inlet	*20
																			Outlet	*20
		W / (L/s)	0.32																Breakout	*20
SQS500-1ECL	10V	m³ / s	1.422	1.397	1.372	1.345	1.318	1.260	1.197	1.129	1.053	0.967	0.868	0.599	50.9	N62	3.51	0.774	Inlet	45
																			Outlet	47
		W / (L/s)	0.46	0.48	0.50	0.52	0.53	0.57	0.62	0.67	0.73	0.80	0.89	1.19					Breakout	49
	8V	m³ / s	1.141	1.114	1.085	1.054	1.020	0.946	0.857	0.744	0.591	0.354			51.1		1.97	0.423	Inlet	41
																			Outlet	42
		W / (L/s)	0.31	0.33	0.34	0.36	0.38	0.43	0.49	0.57	0.69	0.97							Breakout	44
	5V	m³ / s	0.687	0.637	0.577	0.501	0.393								44.7		0.51	0.107	Inlet	28
																			Outlet	28
		W / (L/s)	0.13	0.15	0.18	0.21	0.27												Breakout	30
	2V	m³ / s	0.231												3.7		0.19	0.054	Inlet	*20
																			Outlet	*20
		W / (L/s)	0.22																Breakout	*20

A variable speed drive is integrated within the fan.
Overall total efficiency, r/min and FMEG values are per ISO 12759 installation category D. FLC Amps @ 230V / 1Ph / 50Hz.
Data provided at standard air density of 1.2 kg/m³.
The overall A-weighted sound pressure level is at a distance of 3m with spherical free-field propagation. It is expressed in dB re-20μPa and is presented for comparative purposes only.
* At 2V the average spherical free-field sound pressure levels cannot be accurately measured above the background level in our conventional laboratory facilities. When correctly installed the fan will be inaudible (less than 20dBA).

Elta Fans Limited has a policy of continuous product development and improvement and therefore reserves the right to supply products which may differ from those illustrated and described in this publication. Confirmation of dimensions and data will be supplied on request.

Quietflow SQS

Sound Data

EC

SINGLE Phase - 200V to 277V / 50Hz or 60Hz

Product Code	Control Voltage		Sound Power Level dBW @ Octave Band Hz								Total dB	Silencer dBA Attenuation			
			63Hz	125Hz	250Hz	500Hz	1 kHz	2 kHz	4 kHz	8 kHz		300L	600L	900L	1200L
SQS100-1ECL	10V	Inlet	75	75	79	69	54	50	44	44	82	-10	-15	-21	-23
		Outlet	83	80	76	67	57	51	43	39	85	-8	-12	-17	-19
		Breakout	62	70	70	62	57	51	48	47	74	-	-	-	-
	8V	Inlet	73	74	77	59	52	48	43	41	80	-9	-14	-19	-21
		Outlet	85	79	77	66	55	49	41	37	87	-8	-12	-17	-19
		Breakout	61	70	70	61	56	51	47	46	74	-	-	-	-
	5V	Inlet	66	69	73	47	41	38	32	30	75	-8	-14	-20	-22
		Outlet	73	72	69	54	42	40	31	25	76	-7	-12	-17	-19
		Breakout	51	65	66	49	47	38	34	31	69	-	-	-	-
	2V	Inlet	-	-	-	-	-	-	-	-	-	-	-	-	-
		Outlet	-	-	-	-	-	-	-	-	-	-	-	-	-
		Breakout	-	-	-	-	-	-	-	-	-	-	-	-	-
SQS125-1ECL	10V	Inlet	82	77	77	62	53	49	44	44	84	-7	-11	-16	-19
		Outlet	84	77	81	72	55	51	42	40	86	-9	-13	-18	-21
		Breakout	60	70	67	60	57	51	47	46	72	-	-	-	-
	8V	Inlet	72	78	77	60	52	48	42	42	81	-7	-12	-16	-19
		Outlet	83	76	75	63	53	49	41	37	84	-7	-11	-16	-18
		Breakout	58	70	67	59	56	51	46	45	72	-	-	-	-
	5V	Inlet	69	71	78	51	41	37	31	29	79	-8	-13	-18	-20
		Outlet	72	68	69	52	40	40	31	27	75	-7	-12	-16	-19
		Breakout	51	60	65	48	44	37	33	29	66	-	-	-	-
	2V	Inlet	-	-	-	-	-	-	-	-	-	-	-	-	-
		Outlet	-	-	-	-	-	-	-	-	-	-	-	-	-
		Breakout	-	-	-	-	-	-	-	-	-	-	-	-	-
SQS150-1ECL	10V	Inlet	89	74	75	65	56	52	48	47	89	-6	-9	-12	-15
		Outlet	83	77	79	68	56	54	50	48	85	-7	-12	-15	-17
		Breakout	66	64	66	62	57	52	47	44	71	-	-	-	-
	8V	Inlet	74	72	73	58	53	49	45	44	78	-6	-11	-14	-17
		Outlet	80	75	79	65	53	52	48	44	83	-6	-12	-15	-17
		Breakout	62	62	66	57	54	49	44	40	69	-	-	-	-
	5V	Inlet	65	67	73	49	41	38	33	30	75	-6	-12	-14	-17
		Outlet	69	72	76	54	42	44	37	33	78	-6	-11	-14	-17
		Breakout	47	56	62	49	42	36	30	24	63	-	-	-	-
	2V	Inlet	-	-	-	-	-	-	-	-	-	-	-	-	-
		Outlet	-	-	-	-	-	-	-	-	-	-	-	-	-
		Breakout	-	-	-	-	-	-	-	-	-	-	-	-	-
SQS200-1ECL	10V	Inlet	80	79	78	67	60	54	52	52	84	-6	-10	-14	-17
		Outlet	90	81	80	68	58	55	51	48	91	-5	-9	-12	-15
		Breakout	63	67	68	62	58	53	48	45	72	-	-	-	-
	8V	Inlet	77	78	76	64	56	50	49	49	82	-6	-10	-13	-16
		Outlet	80	79	78	63	55	51	49	46	84	-6	-9	-13	-16
		Breakout	61	65	67	58	55	50	45	42	70	-	-	-	-
	5V	Inlet	68	71	71	52	43	37	38	35	75	-6	-9	-13	-16
		Outlet	68	74	70	53	43	41	36	30	76	-5	-8	-12	-15
		Breakout	51	60	63	49	43	37	34	32	65	-	-	-	-
	2V	Inlet	-	-	-	-	-	-	-	-	-	-	-	-	-
		Outlet	-	-	-	-	-	-	-	-	-	-	-	-	-
		Breakout	-	-	-	-	-	-	-	-	-	-	-	-	-

Please contact Elta Fans for full sound data.

Tests and preparation of the sound data have been carried out in accordance with BS 848 Part 2:1985 at 50% peak pressure.
The Sound Power Level Spectra are in dB re-1pW.

Elta Fans Limited has a policy of continuous product development and improvement and therefore reserves the right to supply products which may differ from those illustrated and described in this publication.
Confirmation of dimensions and data will be supplied on request.

Quietflow SQS

Sound Data

EC

SINGLE Phase - 200V to 277V / 50Hz or 60Hz

Product Code	Control Voltage		Sound Power Level dBW @ Octave Band Hz								Total dB	Silencer dBA Attenuation			
			63Hz	125Hz	250Hz	500Hz	1 kHz	2 kHz	4 kHz	8 kHz		300L	600L	900L	1200L
SQS250-1ECL	10V	Inlet	78	76	77	64	55	50	49	47	82	-6	-10	-12	-14
		Outlet	80	76	75	64	55	54	49	44	82	-6	-10	-12	-14
		Breakout	59	65	71	60	55	49	43	41	73	-	-	-	-
	8V	Inlet	75	74	75	59	50	45	45	44	80	-6	-9	-11	-14
		Outlet	76	72	74	60	51	49	45	40	79	-6	-10	-12	-14
		Breakout	55	63	70	56	50	44	38	36	71	-	-	-	-
	5V	Inlet	67	71	57	49	38	33	38	27	73	-4	-7	-9	-11
		Outlet	66	71	56	48	38	37	34	33	72	-4	-7	-9	-11
		Breakout	46	56	51	44	38	30	28	22	58	-	-	-	-
	2V	Inlet	-	-	-	-	-	-	-	-	-	-	-	-	-
		Outlet	-	-	-	-	-	-	-	-	-	-	-	-	-
		Breakout	-	-	-	-	-	-	-	-	-	-	-	-	-
SQS315-1ECL	10V	Inlet	78	77	83	63	50	52	48	47	85	-6	-8	-10	-14
		Outlet	80	77	81	67	60	52	47	44	85	-6	-8	-10	-14
		Breakout	68	70	76	64	58	53	47	46	78	-	-	-	-
	8V	Inlet	74	84	68	55	44	45	42	40	85	-3	-5	-7	-9
		Outlet	75	82	68	59	54	45	40	36	83	-4	-6	-8	-10
		Breakout	63	73	65	58	53	47	41	39	74	-	-	-	-
	5V	Inlet	67	75	55	43	34	35	30	19	76	-3	-5	-7	-9
		Outlet	67	71	55	46	40	30	27	18	73	-3	-5	-7	-10
		Breakout	55	60	52	45	40	33	26	22	62	-	-	-	-
	2V	Inlet	-	-	-	-	-	-	-	-	-	-	-	-	-
		Outlet	-	-	-	-	-	-	-	-	-	-	-	-	-
		Breakout	-	-	-	-	-	-	-	-	-	-	-	-	-
SQS400-1ECL	10V	Inlet	81	80	83	69	61	58	56	57	86	-5	-7	-9	-13
		Outlet	83	79	82	75	68	62	56	52	87	-6	-9	-11	-15
		Breakout	72	73	78	70	65	60	51	50	81	-	-	-	-
	8V	Inlet	78	80	76	63	54	52	50	50	83	-4	-6	-8	-11
		Outlet	79	78	75	69	60	54	50	45	83	-6	-8	-10	-13
		Breakout	68	72	72	64	58	52	45	44	76	-	-	-	-
	5V	Inlet	68	75	62	48	43	42	38	24	76	-3	-5	-7	-9
		Outlet	70	71	61	54	47	40	34	22	74	-4	-6	-8	-10
		Breakout	58	66	58	49	45	38	35	28	67	-	-	-	-
	2V	Inlet	-	-	-	-	-	-	-	-	-	-	-	-	-
		Outlet	-	-	-	-	-	-	-	-	-	-	-	-	-
		Breakout	-	-	-	-	-	-	-	-	-	-	-	-	-
SQS500-1ECL	10V	Inlet	77	76	67	62	57	54	51	51	80	-	-	-	-
		Outlet	77	80	71	64	58	51	46	42	82	-	-	-	-
		Breakout	74	80	74	66	60	54	48	44	82	-	-	-	-
	8V	Inlet	74	72	63	57	54	49	46	48	76	-	-	-	-
		Outlet	73	74	66	58	53	45	40	39	77	-	-	-	-
		Breakout	69	75	68	61	56	49	43	41	77	-	-	-	-
	5V	Inlet	65	61	49	43	38	37	37	29	67	-	-	-	-
		Outlet	66	60	52	44	39	32	30	27	67	-	-	-	-
		Breakout	65	60	53	47	42	36	36	25	66	-	-	-	-
	2V	Inlet	-	-	-	-	-	-	-	-	-	-	-	-	-
		Outlet	-	-	-	-	-	-	-	-	-	-	-	-	-
		Breakout	-	-	-	-	-	-	-	-	-	-	-	-	-

Please contact Elta Fans for full sound data.

Tests and preparation of the sound data have been carried out in accordance with BS 848 Part 2:1985 at 50% peak pressure.
The Sound Power Level Spectra are in dB re-1pW.

Elta Fans Limited has a policy of continuous product development and improvement and therefore reserves the right to supply products which may differ from those illustrated and described in this publication.
Confirmation of dimensions and data will be supplied on request.

Quietflow SQS

Performance, SFP & Electrical Data

EC

THREE Phase - 380V to 480V / 50Hz or 60Hz

Product Code	Control Voltage	Airflow SFP	Airflow m³/s @ Static Pressure Pa.												Overall Efficiency %	FMEG	Motor Electrical Data		dBA @ 3m	
			0	25	50	75	100	150	200	250	300	350	400	500			FLC Amps	Input kW		
SQS500-3ECL	10V	m³ / s	1.78	1.77	1.75	1.73	1.71	1.67	1.62	1.58	1.53	1.48	1.43	1.31	52.4	N61	2.31	1.507	Inlet	51
																			Outlet	57
		W / (L/s)	0.69	0.71	0.73	0.74	0.76	0.80	0.84	0.88	0.93	0.97	1.03	1.14					Breakout	57
	8V	m³ / s	1.41	1.39	1.37	1.34	1.32	1.26	1.21	1.14	1.07	0.98	0.88	0.62	51.8		1.29	0.781	Inlet	46
																			Outlet	48
		W / (L/s)	0.45	0.47	0.49	0.50	0.52	0.57	0.61	0.66	0.72	0.79	0.87	1.15					Breakout	51
	5V	m³ / s	0.85	0.81	0.76	0.71	0.66	0.50	0.19						47.5		0.47	0.188	Inlet	34
																			Outlet	34
		W / (L/s)	0.19	0.21	0.23	0.25	0.28	0.37	0.73										Breakout	37
	2V	m³ / s	0.28												14.3		0.16	0.025	Inlet	*20
																			Outlet	*20
		W / (L/s)	0.08																Breakout	*20
SQS560-3ECL	10V	m³ / s	2.53	2.51	2.49	2.47	2.46	2.42	2.38	2.34	2.30	2.25	2.20	2.10	52.6	N58	4.32	2.83	Inlet	56
																			Outlet	61
		W / (L/s)	0.99	1.00	1.02	1.03	1.04	1.07	1.10	1.14	1.17	1.20	1.24	1.32					Breakout	-
	8V	m³ / s	2.04	2.01	1.99	1.96	1.94	1.88	1.82	1.76	1.70	1.62	1.54	1.36	52.5		2.29	1.48	Inlet	52
																			Outlet	54
		W / (L/s)	0.63	0.65	0.66	0.68	0.70	0.73	0.77	0.81	0.85	0.90	0.95	1.08					Breakout	-
	5V	m³ / s	1.21	1.17	1.13	1.08	1.02	0.89	0.70	0.37					48.7		0.72	0.35	Inlet	41
																			Outlet	41
		W / (L/s)	0.25	0.27	0.29	0.31	0.33	0.39	0.47	0.72									Breakout	-
	2V	m³ / s	0.40	0.17											19.1		0.19	0.03	Inlet	20
																			Outlet	21
		W / (L/s)	0.08	0.18															Breakout	-
SQS630-3ECL	10V	m³ / s	3.31	3.28	3.26	3.24	3.22	3.17	3.12	3.07	3.01	2.95	2.89	2.76	56.9	N61	5.57	3.62	Inlet	57
																			Outlet	59
		W / (L/s)	0.88	0.90	0.91	0.92	0.94	0.97	1.00	1.03	1.06	1.10	1.13	1.21					Breakout	-
	8V	m³ / s	2.64	2.61	2.59	2.56	2.53	2.47	2.40	2.32	2.24	2.15	2.05	1.82	57.7		2.75	1.79	Inlet	52
																			Outlet	54
		W / (L/s)	0.57	0.58	0.60	0.61	0.63	0.66	0.69	0.72	0.76	0.81	0.86	0.98					Breakout	-
	5V	m³ / s	1.59	1.53	1.48	1.42	1.35	1.19	0.97	0.55					53.4		0.83	0.42	Inlet	39
																			Outlet	40
		W / (L/s)	0.23	0.25	0.26	0.28	0.30	0.35	0.43	0.64									Breakout	-
	2V	m³ / s	0.53	0.24											20.1		0.21	0.05	Inlet	23
																			Outlet	21
		W / (L/s)	0.09	0.18															Breakout	-
SQS710-3ECL	10V	m³ / s	4.40	4.35	4.31	4.26	4.21	4.12	4.02	3.92	3.81	3.70	3.59	3.34	58.4	N63	5.52	3.78	Inlet	56
																			Outlet	58
		W / (L/s)	0.71	0.73	0.75	0.77	0.79	0.82	0.86	0.90	0.94	0.98	1.03	1.12					Breakout	-
	8V	m³ / s	3.48	3.43	3.37	3.31	3.25	3.13	3.00	2.86	2.70	2.54	2.35	1.90	58.5		2.84	1.91	Inlet	51
																			Outlet	53
		W / (L/s)	0.46	0.48	0.50	0.51	0.53	0.57	0.61	0.65	0.70	0.75	0.80	0.94					Breakout	-
	5V	m³ / s	2.07	1.98	1.88	1.76	1.64	1.35	0.89						55.4		0.85	0.44	Inlet	40
																			Outlet	42
		W / (L/s)	0.18	0.20	0.22	0.24	0.27	0.32	0.43										Breakout	-
	2V	m³ / s	0.68												21.5		0.24	0.05	Inlet	23
																			Outlet	25
		W / (L/s)	0.06																Breakout	-

A variable speed drive is integrated within the fan.
Overall total efficiency, r/min and FMEG values are per ISO 12759 installation category D. FLC Amps @ 400V / 3Ph / 50Hz.
Data provided at standard air density of 1.2 kg/m³.
The overall A-weighted sound pressure level is at a distance of 3m with spherical free-field propagation. It is expressed in dB re-20μPa and is presented for comparative purposes only.
* At 2V the average spherical free-field sound pressure levels cannot be accurately measured above the background level in our conventional laboratory facilities. When correctly installed the fan will be inaudible (less than 20dBA).

Elta Fans Limited has a policy of continuous product development and improvement and therefore reserves the right to supply products which may differ from those illustrated and described in this publication. Confirmation of dimensions and data will be supplied on request.

Quietflow SQS

Sound Data

EC

THREE Phase - 380V to 480V / 50Hz or 60Hz

Product Code	Control Voltage		Sound Power Level dBW @ Octave Band Hz								Total dB
			63Hz	125Hz	250Hz	500Hz	1 kHz	2 kHz	4 kHz	8 kHz	
SQS500-3ECL	10V	Inlet	81	80	75	68	63	62	60	53	84
		Outlet	82	84	85	71	66	61	58	47	89
		Breakout	80	82	83	75	69	63	57	53	87
	8V	Inlet	78	77	67	63	57	55	52	50	81
		Outlet	77	81	71	65	58	52	47	41	83
		Breakout	75	80	75	69	63	57	52	47	82
	5V	Inlet	70	66	56	50	43	45	42	31	72
		Outlet	69	66	58	51	44	40	34	27	71
		Breakout	66	68	61	54	49	44	38	31	71
	2V	Inlet	-	-	-	-	-	-	-	-	-
		Outlet	-	-	-	-	-	-	-	-	-
		Breakout	-	-	-	-	-	-	-	-	-
SQS560-3ECL	10V	Inlet	87	83	77	75	69	68	65	63	89
		Outlet	90	88	88	76	70	65	61	58	94
		Breakout	-	-	-	-	-	-	-	-	-
	8V	Inlet	83	81	72	70	64	62	59	56	86
		Outlet	86	87	77	70	64	59	55	51	90
		Breakout	-	-	-	-	-	-	-	-	-
	5V	Inlet	78	72	63	57	51	50	43	42	79
		Outlet	78	72	67	57	50	45	39	35	79
		Breakout	-	-	-	-	-	-	-	-	-
	2V	Inlet	52	46	44	37	27	25	12	10	54
		Outlet	53	53	47	34	29	21	13	11	57
		Breakout	-	-	-	-	-	-	-	-	-
SQS630-3ECL	10V	Inlet	90	85	75	75	70	67	64	62	91
		Outlet	90	91	83	76	70	65	60	58	94
		Breakout	-	-	-	-	-	-	-	-	-
	8V	Inlet	86	82	69	70	64	61	57	57	88
		Outlet	86	87	77	70	63	58	54	51	90
		Breakout	-	-	-	-	-	-	-	-	-
	5V	Inlet	80	68	55	56	50	48	47	42	80
		Outlet	80	70	63	56	49	45	39	34	81
		Breakout	-	-	-	-	-	-	-	-	-
	2V	Inlet	62	44	33	37	41	32	18	17	62
		Outlet	59	46	41	38	37	29	16	14	59
		Breakout	-	-	-	-	-	-	-	-	-
SQS710-3ECL	10V	Inlet	86	86	77	72	71	67	65	64	89
		Outlet	89	92	79	72	69	63	61	57	94
		Breakout	-	-	-	-	-	-	-	-	-
	8V	Inlet	82	83	70	65	64	60	57	60	86
		Outlet	83	88	73	66	61	56	53	50	89
		Breakout	-	-	-	-	-	-	-	-	-
	5V	Inlet	80	64	57	52	56	47	50	45	80
		Outlet	77	65	61	52	61	43	42	34	77
		Breakout	-	-	-	-	-	-	-	-	-
	2V	Inlet	62	39	35	36	42	28	17	18	62
		Outlet	70	40	40	37	38	25	15	16	70
		Breakout	-	-	-	-	-	-	-	-	-

Please contact Elta Fans for full sound data.

Tests and preparation of the sound data have been carried out in accordance with BS 848 Part 2:1985 at 50% peak pressure.
The Sound Power Level Spectra are in dB re-1pW.

Elta Fans Limited has a policy of continuous product development and improvement and therefore reserves the right to supply products which may differ from those illustrated and described in this publication.
Confirmation of dimensions and data will be supplied on request.

Quietflow SQS

Accessories & Wiring Data

EC

For more information on Accessories & Wiring Diagrams, please see individual product downloads, or visit eltaselect.com/information-centre

SINGLE Phase - 200V to 277V / 50Hz or 60Hz

Product Code	Electronic Controller	Flexible Connections (each)	Clamps (each)	AV Mounts (set of 4)	Panel Filter	Electric Heater Battery
SQS100-1ECL	149-POT-10	018-0100-FLEX	018-100-CLAMP	062-SEL03	018-0100-FILT-P	018-0100-HEAT-1
SQS125-1ECL	149-POT-10	018-0125-FLEX	018-125-CLAMP	062-SEL03	018-0125-FILT-P	018-0125-HEAT-1
SQS150-1ECL	149-POT-10	018-0150-FLEX	018-150-CLAMP	062-SEL03	018-0150-FILT-P	018-0150-HEAT-1
SQS200-1ECL	149-POT-10	018-0200-FLEX	018-200-CLAMP	062-SEL03	018-0200-FILT-P	018-0200-HEAT-1
SQS250-1ECL	149-POT-10	018-0250-FLEX	018-250-CLAMP	062-SEL03	018-0250-FILT-P	018-0250-HEAT-1
SQS315-1ECL	149-POT-10	018-0315-FLEX	018-315-CLAMP	062-SEL03	018-0315-FILT-P	018-0315-HEA1/3
SQS400-1ECL	149-POT-10	018-0400-FLEX	018-400-CLAMP	062-SEL04	018-0400-FILT-P	018-0400-HEA1/3
SQS500-1ECL	149-POT-10	018-0500-FLEX	018-500-CLAMP	062-SEL05	018-0500-FILT-P	018-0500-HEAT-3
						018-0500-HEAT-4

Product Code	Silencer 300mm Long	Silencer 600mm Long	Silencer 900mm Long	Silencer 1200mm Long	Wiring Diagram No.
SQS100-1ECL	068-0100-JF1	068-0100-JF2	068-0100-JF3	068-0100-JF4	152-00036
SQS125-1ECL	068-0125-JF1	068-0125-JF2	068-0125-JF3	068-0125-JF4	152-00036
SQS150-1ECL	068-0150-JF1	068-0150-JF2	068-0150-JF3	068-0150-JF4	152-00036
SQS200-1ECL	068-0200-JF1	068-0200-JF2	068-0200-JF3	068-0200-JF4	152-00036
SQS250-1ECL	068-0250-JF1	068-0250-JF2	068-0250-JF3	068-0250-JF4	152-00036
SQS315-1ECL	068-0315-JF1	068-0315-JF2	068-0315-JF3	068-0315-JF4	152-00044
SQS400-1ECL	068-0400-JF1	068-0400-JF2	068-0400-JF3	068-0400-JF4	152-MOEA03K1
SQS500-1ECL	Please enquire.				152-MOEA03K3

THREE Phase - 380V to 480V / 50Hz or 60Hz

Product Code	Electronic Controller	Flexible Connections (each)	Clamps (each)	AV Mounts (set of 4)	Panel Filter	Electric Heater Battery
SQS500-3ECL	149-POT-10	018-0500-FLEX	018-500-CLAMP	062-SEL05	018-0500-FILT-P	018-0500-HEAT-3
						018-0500-HEAT-4
SQS560-3ECL	149-POT-10	018-0560-FLEX	018-560-CLAMP	062-SEL07	018-0560-FILT-P	-
SQS630-3ECL	149-POT-10	018-0630-FLEX	018-630-CLAMP	062-SEL07	018-0630-FILT-P	-
SQS710-3ECL	149-POT-10	018-0710-FLEX	018-710-CLAMP	062-SEL07	018-0710-FILT-P	-

Product Code	Silencer 300mm Long	Silencer 600mm Long	Silencer 900mm Long	Silencer 1200mm Long	Wiring Diagram No.
SQS500-3ECL	Please enquire.				152-MOEA03K3
SQS560-3ECL					152-M0EA03K3
SQS630-3ECL					152-M0EA03K3
SQS710-3ECL					152-M0EA03K3

Elta Fans Limited has a policy of continuous product development and improvement and therefore reserves the right to supply products which may differ from those illustrated and described in this publication. Confirmation of dimensions and data will be supplied on request.

Quietflow SQS

Optimum Energy Efficiency Point

EC

SINGLE Phase - 200V to 277V / 50Hz or 60Hz

Product Code	Volume m³/s	Pressure Pa	Input kW	Speed r/min	Efficiency %	FMEG
SQS100-1ECL	0.064	460	0.112	3492	30.2	N50
SQS125-1ECL	0.081	414	0.124	3428	31.2	N51
SQS150-1ECL	0.086	467	0.122	3486	37.7	N57
SQS200-1ECL	0.156	496	0.232	3404	37.7	N54
SQS250-1ECL	0.177	290	0.179	2339	32.8	N51
SQS315-1ECL	0.331	389	0.406	2013	35.4	N50
SQS400-1ECL	0.706	533	0.926	2200	44.3	N55
SQS500-1ECL	0.863	414	0.769	1422	50.9	N62

A variable speed drive is integrated within the fan.
Data provided at standard air density of 1.2 kg/m³.
Values are per ISO 12759 installation category D (total).

THREE Phase - 380V to 480V / 50Hz or 60Hz

Product Code	Volume m³/s	Pressure Pa	Input kW	Speed r/min	Efficiency %	FMEG
SQS500-3ECL	1.088	670	1.495	1799	52.4	N61
SQS560-3ECL	1.568	875	2.761	1807	52.6	N58
SQS630-3ECL	2.066	895	3.418	1626	56.9	N61
SQS710-3ECL	2.370	823	3.503	1344	58.4	N63

AC EC

Dimensional Data

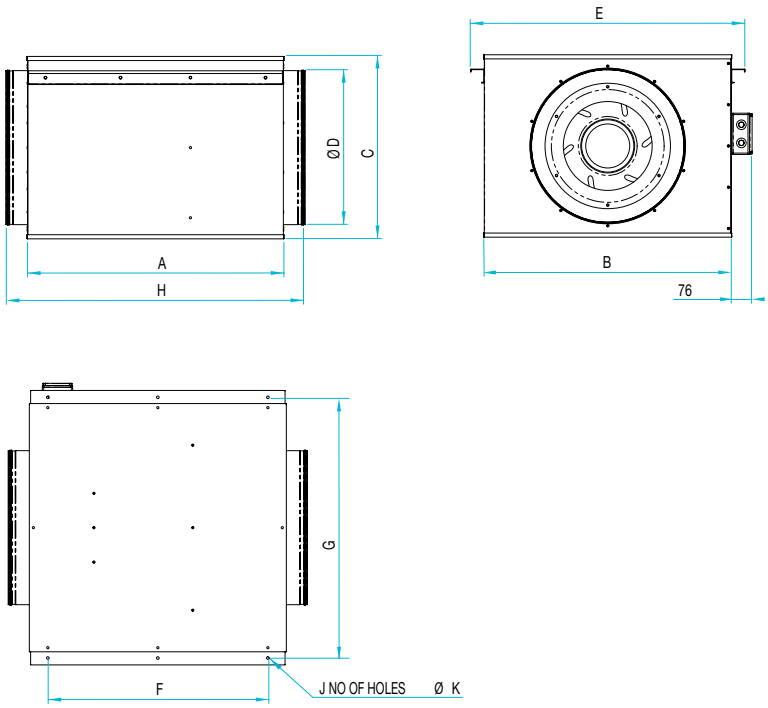

Product Code	A	B	C	D	E	F	G	H	J	K	Weight kg
SQS100				100							
SQS125	509	350	261	125	390	485	380	587			14
SQS150				150							
SQS200	584	396	303	200	436	550	426	662	4	8	17
SQS250			333	250				702			19
SQS315	635	485	400	315	525	580	515	753			27
SQS400	700	570	472	400	670		620	858			36
SQS500	880	750	601	500	850	700	800	1038			60
SQS560	930	898	663	560	998	800	948	1086	6	10	87
SQS630	1030	998	767	630	1098	900	1048	1186			109
SQS710	1180	1168	868	710	1268	1000	1218	1375			157

All dimensions are expressed in mm.

Elta Fans Limited has a policy of continuous product development and improvement and therefore reserves the right to supply products which may differ from those illustrated and described in this publication. Confirmation of dimensions and data will be supplied on request.

BUILDING SERVICES

Tel: +44 (0) 1384 275800
Fax: +44 (0) 1384 275810
e-mail: bs@eltafans.co.uk

46 Third Avenue
Pensnett Trading Estate
Kingswinford, West Midlands
DY6 7US, United Kingdom

APPLIED TECHNOLOGY

Tel: +44 (0) 1489 566500
Fax: +44 (0) 1489 566555
e-mail: at@eltafans.co.uk

17 Barnes Wallis Road
Segensworth East Industrial Estate
Fareham, Hampshire
PO15 5ST, United Kingdom

EXPORT

Tel: +44 (0) 1489 566500
Fax: +44 (0) 1489 566555
e-mail: export@eltafans.co.uk

17 Barnes Wallis Road
Segensworth East Industrial Estate
Fareham, Hampshire
PO15 5ST, United Kingdom

www.eltafans.com

BS EN ISO 9001:2008
FM 556465

A member of
HEVAC ASSOCIATION

CIBSE
PATRONS

A member of ELTA GROUP LIMITED