ELTA SELECT

Jetflow SJ

t: 01384 275800
f: 01384 275810
e: bs@eltafans.co.uk
visit: eltaselect.com

AXIAL

MIXED FLOW

CENTRIFUGAL

ROOF

BIFURICATED

DE-STRATIFICATION

ATEX

SMOKE

CIRCULATING

WINDOW / WALL

HEAT RECOVERY

ATTENUATORS

CONTROLS

Catalogue Guide

Icon Key

info

The Select Catalogue has a number of symbols and icons, designed to make the catalogue quicker and easier to use. An explanation of these are listed below:

Application Icons

Applications are now represented via a set of pictorial icons. The application icons key is featured on the facing page. Some applications have been grouped together, where the environmental conditions have similarities.

New Products

NEW PRODUCT

The icon to the right indicates a new addition to the Select product range. This will be displayed on the introductory page of each product and can also be seen on the contents page for each category.

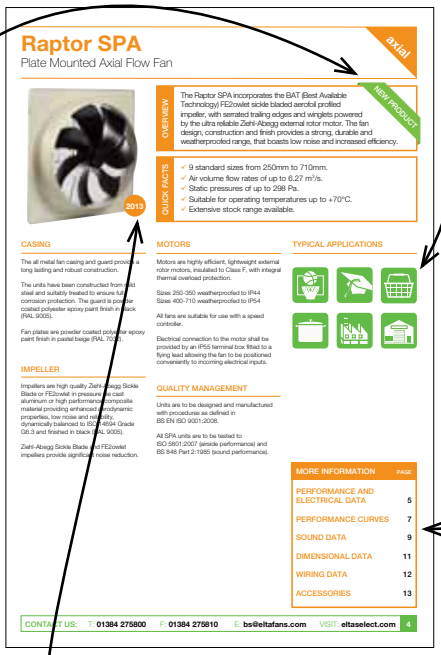

Raptor SPA

Plate Mounted Axial Flow Fan

Axial

NEW PRODUCT

OVERVIEW

The Raptor SPA incorporates the BAT (Best Available Technology) FE2owlet sickle bladed aerofoil profiled impeller, with serrated trailing edges and winglets powered by the ultra reliable Ziehl-Abegg external rotor motor. The fan design, construction and finish provides a strong, durable and weatherproofed range, that boasts low noise and increased efficiency.

QUICK FACTS

- 9 standard sizes from 250mm to 710mm.
- Air volume flow rates of up to 6.27 m³/s.
- Static pressures of up to 298 Pa.
- Suitable for operating temperatures up to +70°C.
- Extensive stock range available.

2013

CASING

The all metal fan casing and guard provide a long lasting and robust construction.

The units have been constructed from mild steel and suitably treated to ensure full corrosion protection. The guard is powder coated polyester epoxy paint finish in black (RAL 9005).

Fan plates are powder coated polyester epoxy paint finish in pastel beige (RAL 7032).

IMPELLER

Impellers are high quality Ziehl-Abegg Sickle Blade or FE2owlet in pressure cast aluminum or high performance composite material providing enhanced aerodynamic properties, low noise and reliability, dynamically balanced to ISO 21940 Grade G6.3 and finished in black (RAL 9005).

Ziehl-Abegg Sickle Blade and FE2owlet impellers provide significant noise reduction.

MOTORS

Motors are highly efficient, lightweight external rotor motors, insulated to Class F, with integral thermal overload protection.

Sizes 250-350 weatherproofed to IP44
Sizes 400-710 weatherproofed to IP54

All fans are suitable for use with a speed controller.

Electrical connection to the motor shall be provided by an IP55 terminal box fitted to a flying lead allowing the fan to be positioned conveniently to incoming electrical inputs.

QUALITY MANAGEMENT

Units are to be designed and manufactured with procedures as defined in BS EN ISO 9001:2008.

All SPA units are to be tested to ISO 5801:2007 (airside performance) and BS 848 Part 2:1985 (sound performance).

TYPICAL APPLICATIONS

MORE INFORMATION PAGE

PERFORMANCE AND ELECTRICAL DATA	5
PERFORMANCE CURVES	7
SOUND DATA	9
DIMENSIONAL DATA	11
WIRING DATA	12
ACCESSORIES	13

CONTACT US: T: 01384 275800 F: 01384 275810 E: bs@eltafans.com VISIT: eltaselect.com 4

More Information Box

A more information box now also features on each introductory product page. This makes it easier to locate any further information you may require by displaying the page number to refer to, or directing you to the website - www.eltaselect.com.

2013

2013

New legislation has driven change in the Elta Select range of products. Elta Fans have revolutionised both their new and existing product range to meet legislation directives, but also to incorporate the 'Best Available Technology'; creating a reliable efficient and powerful range of products. The products which conform to the 2013 legislation are indicated with the above logo. This logo is pictured both on the main product page and the category contents page.

Catalogue Guide

Application Key

info

Each product has an indication of typical applications via a set of icons.
Every icon is displayed below, along with the definition of what it represents.

Sports Hall
Squash Courts
Gymnasium

Schools
Colleges

Shopping Mall

Shops
Retail Parks
Commercial

Kitchens

Factories
Industrial Units

Warehousing

Shower Rooms
Bathrooms
Toilets
Changing Rooms

Marine

Agriculture

Airports

Corrosive
Atmospheres

Banks

Hospitals

Hotels

Restaurants
Cafes
Cafeterias
Pubs

Theatres

Air Conditioning

Residential
Public Buildings
Entrance Halls

Underground
Stations

Libraries

Offices

Laundries
Utility Rooms

Temporary
Ventilation
Construction
Sites

Enclosed Car
Parks

Stairwell
Pressurisation

Workshops
Foundries
Welding Bays
Machine Shops
Spray Booths
Lift Motor Rooms

Marquees

Conference Halls

Cooling Towers
Stations
Boiler Houses
Heavy Industrial

Hot Gas
Situations

General HVAC

Jetflow SJ

Centrifugal In-Line Fan

centrif.

OVERVIEW

The Jetflow SJ range of all metal in-line centrifugal fans are designed to provide the ideal solution for high performance requirements in medium pressure systems. Ideally suited to a wide range of residential, commercial and industrial extract or supply applications, Jetflow boasts one of the most extensive range of fans on the market to meet system requirements.

QUICK FACTS

- ✓ 8 standard sizes from 100mm to 355mm.
- ✓ Air volume flow rates of up to 0.66 m^3/s.
- ✓ Static pressures of up to 800 Pa.
- ✓ Suitable for operating temperatures up to +50°C.
- ✓ Extensive stock range available.

CASING

The all metal fan casing and guard provide a long lasting and robust construction.

The units have been constructed from mild steel and suitably treated to ensure full corrosion protection.

Fan casings shall have a high resistance epoxy paint finish.

IMPELLER

Impellers shall be single inlet backward curved centrifugal type.

Impellers are balanced to ISO 14694 Grade G6.3.

MOTORS

Highly efficient, maintenance free external rotor motors shall be used, matched to the aerodynamic performance of the impeller.

These shall be protected to IP44 and suitable for speed control and working temperatures of up to +50°C.

Electrical connection shall be provided by an IP54 terminal box fitted onto the unit casing.

QUALITY MANAGEMENT

Units are to be designed and manufactured with procedures as defined in BS EN ISO 9001:2008.

All SJ units are to be tested to ISO 5801:2007 (airside performance) and BS 848 Part 2:1985 (sound performance).

TYPICAL APPLICATIONS

MORE INFORMATION

MORE INFORMATION	PAGE
PERFORMANCE AND ELECTRICAL DATA	5
PERFORMANCE CURVES	5
SOUND DATA	6
DIMENSIONAL DATA	6
SILENCER DATA	7
WIRING DATA	7
ACCESSORIES	8

Jetflow SJ

Performance and Electrical Data

SINGLE Phase - 220V-240V / 50Hz

Product Code	Speed r/min	Airflow	Airflow m³/s @ Static Pressure Pa.												Motor Electrical Data	
			0	50	100	150	200	250	300	400	500	600	700	800	FLC Amps	Input Watts
SJ100A	2000	m³/s	0.056	0.051	0.045	0.040	0.033	0.024	0.009						0.26	68
SJ100B	2400	m³/s	0.066	0.062	0.058	0.052	0.045	0.032	0.019						0.27	60
SJ125A	1700	m³/s	0.072	0.063	0.054	0.044	0.034	0.022	0.008						0.27	62
SJ125B	2350	m³/s	0.093	0.081	0.070	0.058	0.045	0.031	0.013						0.26	58
SJ150	2350	m³/s	0.102	0.089	0.075	0.060	0.043	0.023							0.28	65
SJ160	2350	m³/s	0.112	0.097	0.082	0.063	0.050	0.032							0.28	63
SJ200A	2400	m³/s	0.17	0.15	0.12	0.09	0.07	0.06							0.32	73
SJ200B	2430	m³/s	0.25	0.23	0.22	0.19	0.17	0.15	0.13	0.11	0.04				0.66	154
SJ250A	2450	m³/s	0.28	0.26	0.24	0.22	0.20	0.18	0.16	0.14	0.11				0.82	180
SJ315	2420	m³/s	0.35	0.33	0.27	0.21	0.17	0.14	0.12	0.10	0.02				0.86	192
SJ315B	2630	m³/s	0.51	0.47	0.42	0.38	0.34	0.30	0.27	0.20	0.13	0.07			1.30	297
SJ355A	1330	m³/s	0.61	0.59	0.55	0.51	0.43	0.32	0.19						1.12	248
SJ355B	2560	m³/s	0.66	0.65	0.64	0.63	0.62	0.60	0.59	0.55	0.50	0.41	0.27	0.11	2.92	630

Performance Curves

SINGLE Phase
Sizes 100 - 160mm

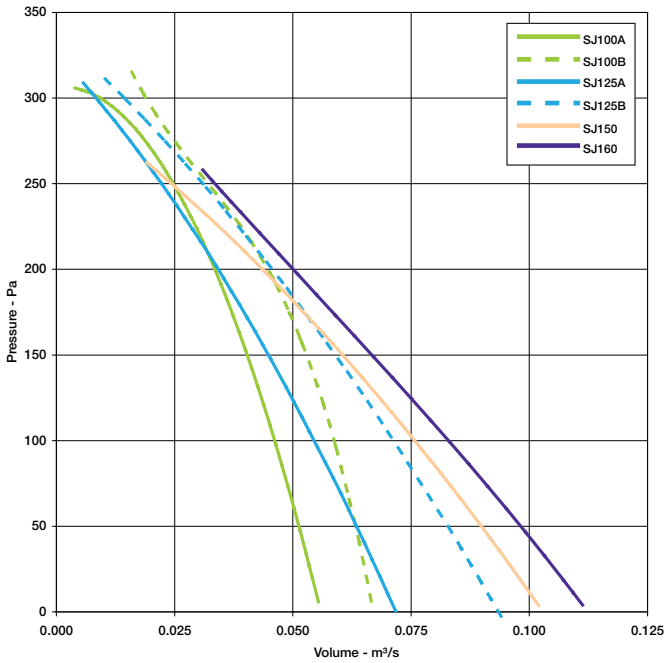

SINGLE Phase
Sizes 200 - 355mm

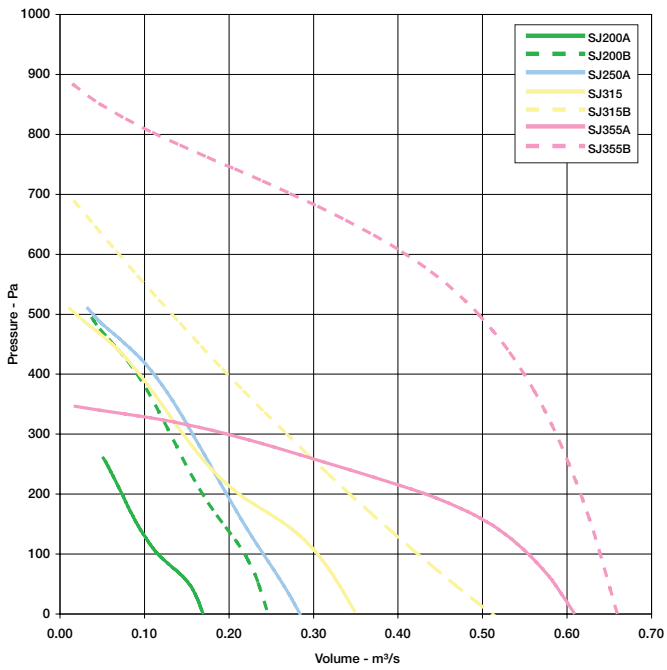

Jetflow SJ

Sound Data

SINGLE Phase - 220V-240V / 50Hz

Product Code	In-Duct Sound Power Level dBW @ Octave Band Hz								dBA @ 3m
	63Hz	125Hz	250Hz	500Hz	1 kHz	2 kHz	4 kHz	8 kHz	
SJ100A	57	49	57	50	50	47	43	38	34
SJ100B	60	55	65	58	58	55	49	45	42
SJ125A	53	51	55	54	53	49	42	36	36
SJ125B	58	57	61	60	60	56	50	45	43
SJ150	62	57	66	63	63	59	53	46	46
SJ160	63	60	70	65	66	61	55	59	49
SJ200A	64	67	72	67	67	64	59	57	51
SJ200B	65	70	71	70	68	65	63	59	52
SJ250A	63	63	67	69	69	65	65	64	53
SJ315	61	60	63	70	68	65	63	66	52
SJ315B	65	64	67	74	72	69	67	70	56
SJ355A	78	80	79	76	73	69	64	50	57
SJ355B	88	93	98	95	94	89	83	79	77

Tests and preparation of the sound data have been carried out in accordance with BS 848 Part 2:1985 at 50% peak pressure.
The In-Duct Sound Power Level Spectra are in dB re-1pW.
The overall A-weighted sound pressure level is at a distance of 3m with spherical free-field propagation. It is expressed in dB re-20μPa and is presented for comparative purposes only.

Dimensional Data

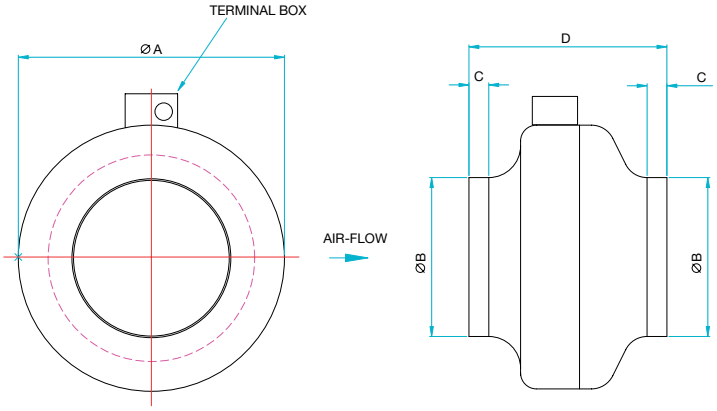

Product Code	A	B	C	D	Weight kg
SJ100A	241	98	25	210	3.0
SJ100B					
SJ125A	241	123	25	210	3.5
SJ125B					
SJ150	241	148	25	210	3.5
SJ160	241	158	25	210	3.5
SJ200A	335	198	25	230	4.5
SJ200B					
SJ250A	335	248	25	230	5.5
SJ315	404	313	30	295	6.0
SJ315B				308	7.0
SJ355A	484	355	44	400	11.8
SJ355B					14.1

All dimensions are expressed in mm.

Jetflow SJ

Silencer Data

SINGLE Phase - 220V-240V / 50Hz

Product Code	dBA Attenuation			
	300L	600L	900L	1200L
SJ100A	-13	-19	-25	-27
SJ100B	-13	-19	-25	-27
SJ125A	-14	-20	-25	-28
SJ125B	-15	-21	-26	-29
SJ150	-12	-19	-22	-24
SJ160	-11	-17	-21	-23
SJ200A	11	-15	-19	-22
SJ200B	-12	-16	-21	-23
SJ250A	-13	-17	-20	-23
SJ315	-12	-16	-18	-20
SJ315B	-13	-17	-19	-21
SJ355A	-11	-14	-16	-18
SJ355B	-12	-15	-17	-19

Wiring Data

Please see our Wiring Diagrams download on www.eltaselect.com for more information.

SINGLE Phase - 220V-240V / 50Hz

Product Code	Wiring Diagram No.
SJ100A	152-505
SJ100B	152-505
SJ125A	152-505
SJ125B	152-505
SJ150	152-505
SJ160	152-505
SJ200A	152-505
SJ200B	152-505
SJ250A	152-505
SJ315	152-505
SJ315B	152-505
SJ355A	152-505
SJ355B	152-505

Jetflow SJ

Accessories

Please see our Centrifugal Accessories download on www.eltaselect.com for more information.

SINGLE Phase - 220V-240V / 50Hz

Product Code	Electronic Controller	Flexible Connections (each)	Clamps (each)	Damper	Panel Filter	Electric Heater Battery	Silencer 300mm Long	Silencer 600mm Long	Silencer 900mm Long	Silencer 1200mm Long
SJ100A	149-EL21	018-0100-FLEX	018-100-CLAMP	018-100-DAMPER	018-0100-FILT-P	018-0100-HEAT-1	068-0100-JF1	068-0100-JF2	068-0100-JF3	068-0100-JF4
SJ100B	149-EL21	018-0100-FLEX	018-100-CLAMP	018-100-DAMPER	018-0100-FILT-P	018-0100-HEAT-1	068-0100-JF1	068-0100-JF2	068-0100-JF3	068-0100-JF4
SJ125A	149-EL21	018-0125-FLEX	018-125-CLAMP	018-125-DAMPER	018-0125-FILT-P	018-0125-HEAT-1	068-0125-JF1	068-0125-JF2	068-0125-JF3	068-0125-JF4
SJ125B	149-EL21	018-0125-FLEX	018-125-CLAMP	018-125-DAMPER	018-0125-FILT-P	018-0125-HEAT-1	068-0125-JF1	068-0125-JF2	068-0125-JF3	068-0125-JF4
SJ150	149-EL21	018-0150-FLEX	018-150-CLAMP	018-150-DAMPER	018-0150-FILT-P	018-0150-HEAT-1	068-0150-JF1	068-0150-JF2	068-0150-JF3	068-0150-JF4
SJ160	149-EL21	018-0160-FLEX	018-160-CLAMP	018-160-DAMPER	018-0160-FILT-P	018-0160-HEAT-1	068-0160-JF1	068-0160-JF2	068-0160-JF3	068-0160-JF4
SJ200A	149-EL21	018-0200-FLEX	018-200-CLAMP	018-200-DAMPER	018-0200-FILT-P	018-0200-HEAT-1	068-0200-JF1	068-0200-JF2	068-0200-JF3	068-0200-JF4
SJ200B	149-EL21	018-0200-FLEX	018-200-CLAMP	018-200-DAMPER	018-0200-FILT-P	018-0200-HEAT-1	068-0200-JF1	068-0200-JF2	068-0200-JF3	068-0200-JF4
SJ250A	149-EL21	018-0250-FLEX	018-250-CLAMP	018-250-DAMPER	018-0250-FILT-P	018-0250-HEAT-1	068-0250-JF1	068-0250-JF2	068-0250-JF3	068-0250-JF4
SJ315	149-EL21	018-0315-FLEX	018-315-CLAMP	018-315-DAMPER	018-0315-FILT-P	018-0315-HEA1/3	068-0315-JF1	068-0315-JF2	068-0315-JF3	068-0315-JF4
SJ315B	149-EL21	018-0315-FLEX	018-315-CLAMP	018-315-DAMPER	018-0315-FILT-P	018-0315-HEA1/3	068-0315-JF1	068-0315-JF2	068-0315-JF3	068-0315-JF4
SJ355A	149-EL21	018-0355-FLEX	018-355-CLAMP	018-355-DAMPER	018-0355-FILT-P	018-0355-HEAT-1	068-0355-JF1	068-0355-JF2	068-0355-JF3	068-0355-JF4
SJ355B	149-EL41	018-0355-FLEX	018-355-CLAMP	018-355-DAMPER	018-0355-FILT-P	018-0355-HEAT-1	018-0355-JF1	018-0355-JF2	018-0355-JF3	018-0355-JF4

BUILDING SERVICES

Tel: +44 (0) 1384 275800
Fax: +44 (0) 1384 275810
e-mail: bs@eltafans.co.uk

46 Third Avenue
Pensnett Trading Estate
Kingswinford, West Midlands
DY6 7US, United Kingdom

APPLIED TECHNOLOGY

Tel: +44 (0) 1489 566500
Fax: +44 (0) 1489 566555
e-mail: at@eltafans.co.uk

17 Barnes Wallis Road
Segnesworth East Industrial Estate
Fareham, Hampshire
PO15 5ST, United Kingdom

EXPORT

Tel: +44 (0) 1489 566500
Fax: +44 (0) 1489 566555
e-mail: export@eltafans.co.uk

17 Barnes Wallis Road
Segnesworth East Industrial Estate
Fareham, Hampshire
PO15 5ST, United Kingdom

www.eltafans.com

BS EN ISO 9001:2008
FM 556465

A member of
HEVAC ASSOCIATION

PATRONS

A member of ELTA GROUP LIMITED