ELTA SELECT

Skyflow SSMF

Product Brochure

t: **01384 275800**
f: **01384 275810**
e: **bs@eltafans.co.uk**
visit: **eltaselect.com**

Skyflow SSMF

Roof Mounted Mixed Flow Fan

roof

OVERVIEW

The Skyflow SSMF is a lightweight range of horizontal discharge mixed flow roof extract units which balance the need to satisfy architects modern day building needs against a low silhouette design. The Skyflow is UV stabilised for a durable, long lasting product, which delivers exceptional performance and noise characteristics.

MORE INFORMATION

		AC PAGE NO.
Performance, SFP & Electrical Data	1Ph	3
	3Ph	4
Sound Data	1Ph	3
	3Ph	5
Accessories & Wiring Data	All	6
Optimum Energy Efficiency Point	All	7
Dimensional Data	All	8

QUICK FACTS

- ✓ 7 standard sizes from 315mm to 630mm.
- ✓ Air volume flow rates of up to 3.87 m³/s.
- ✓ Static pressures up to 761 Pa.
- ✓ Suitable for operating temperatures up to +70°C.
- ✓ Bird guards included.

CASING

The top cowl and fan support housing shall be manufactured from UV stabilised GRP finished in goose wing grey (BS 00-A-05).

The all metal fan casing and guard provides a long lasting and robust construction. The unit shall incorporate a zinc plated frame and a bird guard on the discharge side.

IMPELLER

Adjustable pitch mixed flow impellers shall be provided with the blade angles set to meet the required duty.

The impeller construction shall comprise of aluminium spinnings and pressings in natural finish, together with steel hub assemblies, suitably zinc plated.
Assembled impellers are to be dynamically balanced to ISO 14694 Grade G6.3.

MOTORS

Motors are highly efficient, lightweight induction motors with sealed for life, maintenance free ball bearings, which allows the fan to be installed at any angle.

Each motor is matched to the aerodynamic performance of the impeller. Motors are Class F insulated to EN 60034-5, weatherproofed to IP55 and all suitable for speed control. Each motor has integral thermal overload protection.

Fans are suitable for operating temperatures between -20°C and +70°C fixed speed and -20°C and +50°C when used with a speed controller. Electrical connection to the motor shall be provided by an IP55 terminal box fitted to a 550mm long flying lead.

QUALITY MANAGEMENT

Units are to be designed and manufactured with procedures as defined in BS EN ISO 9001:2008. All SSMF units are to be tested to ISO 5801:2007 (airside performance) and BS 848 Part 2:1985 (sound performance).

TYPICAL APPLICATIONS

- Libraries
- Hospitals
- Offices
- Banks
- Shops
- Small Industrial Units
- Retail Parks

Elta Fans Limited has a policy of continuous product development and improvement and therefore reserves the right to supply products which may differ from those illustrated and described in this publication. Confirmation of dimensions and data will be supplied on request.

Skyflow SSMF

Performance, SFP & Electrical Data

AC

SINGLE Phase - 220V to 240V / 50Hz

Product Code	Speed r/min	Airflow	Airflow m³/s @ Static Pressure Pa.												Overall Efficiency %	FMEG	Motor Electrical Data			dBA @ 3m	
			0	25	50	75	100	150	200	250	300	350	400	500			FLC Amps	SC Amps	Output kW		
SSMF315/4-5-2	1395	**m³ / s**	**0.583**	**0.557**	**0.529**	**0.499**	**0.466**	**0.386**	**0.247**						17.0	N32	1.80	3.60	0.250	Inlet	58
		W / (L/s)	0.57	0.60	0.64	0.68	0.73	0.89	1.39											Outlet	-
SSMF315/6-5-2	935	**m³ / s**	**0.378**	**0.336**	**0.287**	**0.217**	**0.051**								10.1	N28	1.05	2.00	0.120	Inlet	47
		W / (L/s)	0.42	0.48	0.56	0.75	3.12													Outlet	-
SSMF350/4-4-2	1300	**m³ / s**	**0.944**	**0.903**	**0.861**	**0.817**	**0.772**	**0.669**	**0.533**	**0.230**					23.3	N37	1.80	3.60	0.250	Inlet	59
		W / (L/s)	0.45	0.48	0.51	0.54	0.58	0.68	0.86	1.93										Outlet	-
SSMF350/6-5-2	885	**m³ / s**	**0.641**	**0.584**	**0.522**	**0.449**	**0.341**								18.3	N36	1.05	2.00	0.120	Inlet	49
		W / (L/s)	0.29	0.32	0.37	0.43	0.56													Outlet	-
SMF400/4-5-2	1330	**m³ / s**	**1.186**	**1.151**	**1.116**	**1.079**	**1.041**	**0.958**	**0.863**	**0.750**	**0.604**	**0.404**	**0.192**		22.3	N33	3.60	10.80	0.550	Inlet	63
		W / (L/s)	0.68	0.70	0.73	0.75	0.79	0.86	0.97	1.12	1.40	2.05	4.01							Outlet	-
SSMF400/6-5-2	820	**m³ / s**	**0.788**	**0.720**	**0.649**	**0.569**	**0.465**	**0.105**							20.1	N37	1.05	2.00	0.120	Inlet	51
		W / (L/s)	0.29	0.32	0.36	0.41	0.50	2.11												Outlet	-
SSMF450/4-4-2	1290	**m³ / s**	**1.654**	**1.599**	**1.543**	**1.487**	**1.431**	**1.313**	**1.187**	**1.044**	**0.876**	**0.668**	**0.424**	**0.053**	25.0	N35	4.90	15.00	0.750	Inlet	63
		W / (L/s)	0.60	0.62	0.64	0.66	0.69	0.76	0.86	1.00	1.23	1.65	2.58	18.05						Outlet	-
SSMF450/6-5-2	935	**m³ / s**	**1.286**	**1.210**	**1.133**	**1.055**	**0.973**	**0.786**	**0.538**	**0.184**					19.1	N31	6.00	12.60	0.550	Inlet	55
		W / (L/s)	0.45	0.48	0.52	0.56	0.62	0.79	1.18	3.24										Outlet	-
SSMF500/6-5-2	890	**m³ / s**	**1.608**	**1.523**	**1.437**	**1.346**	**1.251**	**1.040**	**0.783**	**0.452**	**0.081**				21.1	N32	6.00	12.60	0.550	Inlet	58
		W / (L/s)	0.49	0.52	0.55	0.58	0.62	0.74	0.96	1.58	7.69									Outlet	-
SSMF560/6-3-2	875	**m³ / s**	**2.000**	**1.916**	**1.827**	**1.731**	**1.628**	**1.393**	**1.097**	**0.706**					24.8	N36	6.00	12.60	0.550	Inlet	60
		W / (L/s)	0.41	0.43	0.46	0.49	0.52	0.61	0.76	1.15										Outlet	-

Overall static efficiency and r/min values are as per ISO 12759 installation category C.
FLC Amps @ 230V / 1Ph / 50Hz. Data provided at standard air density of 1.2 kg/m³.
The overall A-weighted sound pressure level is at a distance of 3m with spherical free-field propagation. It is expressed in dB re-20μPa and is presented for comparative purposes only.

Sound Data

SINGLE Phase - 220V to 240V / 50Hz

Product Code	Speed r/min		Sound Power Level dBW @ Octave Band Hz								Total dB
			63Hz	125Hz	250Hz	500Hz	1 kHz	2 kHz	4 kHz	8 kHz	
SSMF315/4-5-2	1395	Inlet	87	82	84	74	72	68	63	57	90
		Outlet	-	-	-	-	-	-	-	-	-
SSMF315/6-5-2	935	Inlet	81	76	69	64	62	56	50	43	83
		Outlet	-	-	-	-	-	-	-	-	-
SSMF350/4-4-2	1300	Inlet	91	85	85	76	73	69	65	58	93
		Outlet	-	-	-	-	-	-	-	-	-
SSMF350/6-5-2	885	Inlet	82	79	73	66	64	59	53	46	84
		Outlet	-	-	-	-	-	-	-	-	-
SSMF400/4-5-2	1330	Inlet	94	95	84	78	76	76	72	66	98
		Outlet	-	-	-	-	-	-	-	-	-
SSMF400/6-5-2	820	Inlet	84	80	72	68	66	62	57	51	86
		Outlet	-	-	-	-	-	-	-	-	-
SSMF450/4-4-2	1290	Inlet	93	90	86	78	78	77	72	65	96
		Outlet	-	-	-	-	-	-	-	-	-
SSMF450/6-5-2	935	Inlet	86	83	77	72	70	66	60	53	88
		Outlet	-	-	-	-	-	-	-	-	-
SSMF500/6-5-2	890	Inlet	91	86	80	73	73	71	66	60	93
		Outlet	-	-	-	-	-	-	-	-	-
SSMF560/6-3-2	875	Inlet	90	88	81	78	76	71	65	59	93
		Outlet	-	-	-	-	-	-	-	-	-

Tests and preparation of the sound data have been carried out in accordance with BS 848 Part 2:1985 at 50% peak pressure.
The Sound Power Level Spectra are in dB re-1pW.

Elta Fans Limited has a policy of continuous product development and improvement and therefore reserves the right to supply products which may differ from those illustrated and described in this publication.
Confirmation of dimensions and data will be supplied on request.

Skyflow SSMF

Performance, SFP & Electrical Data

AC

THREE Phase - 380V to 415V / 50Hz

Product Code	Speed r/min	Airflow	Airflow m³/s @ Static Pressure Pa.												Overall Efficiency %	FMEG	Motor Electrical Data			dBA @ 3m	
			0	25	50	75	100	150	200	250	300	350	400	500			FLC Amps	SC Amps	Output kW		
SSMF315/4-5-3	1330	**m³ / s**	**0.597**	**0.566**	**0.534**	**0.500**	**0.463**	**0.377**	**0.250**						17.4	N32	1.40	4.50	0.37	Inlet	59
		W / (L/s)	0.53	0.57	0.61	0.66	0.71	0.87	1.28											Outlet	-
SSMF315/6-5-3	935	**m³ / s**	**0.388**	**0.342**	**0.282**	**0.184**									-	-	0.68	1.70	0.18	Inlet	47
		W / (L/s)	0.30	0.35	0.43	0.64														Outlet	-
SSMF350/4-5-3	1330	**m³ / s**	**0.932**	**0.898**	**0.860**	**0.820**	**0.770**	**0.670**	**0.540**	**0.340**					22.9	N36	1.40	4.50	0.37	Inlet	60
		W / (L/s)	0.50	0.52	0.55	0.58	0.62	0.72	0.89	1.38										Outlet	-
SSMF350/6-5-3	885	**m³ / s**	**0.704**	**0.655**	**0.596**	**0.522**	**0.410**								22.5	N40	0.68	1.70	0.18	Inlet	50
		W / (L/s)	0.26	0.28	0.31	0.35	0.45													Outlet	-
SSMF400/4-5-3	1380	**m³ / s**	**1.372**	**1.337**	**1.302**	**1.265**	**1.227**	**1.146**	**1.057**	**0.956**	**0.839**	**0.696**	**0.514**	**0.122**	28.8	N39	2.00	7.50	0.75	Inlet	65
		W / (L/s)	0.64	0.65	0.67	0.69	0.71	0.76	0.83	0.92	1.04	1.25	1.67	6.42						Outlet	-
SSMF400/6-5-3	820	**m³ / s**	**0.833**	**0.766**	**0.695**	**0.617**	**0.524**	**0.244**							21.7	N38	0.68	1.70	0.18	Inlet	52
		W / (L/s)	0.30	0.32	0.35	0.40	0.46	0.96												Outlet	-
SSMF450/4-4-3	1390	**m³ / s**	**1.797**	**1.734**	**1.674**	**1.616**	**1.558**	**1.443**	**1.326**	**1.202**	**1.067**	**0.915**	**0.736**	**0.303**	27.0	N36	2.00	7.50	0.75	Inlet	64
		W / (L/s)	0.62	0.64	0.66	0.68	0.71	0.77	0.85	0.96	1.11	1.33	1.69	3.96						Outlet	-
SSMF450/6-5-3	935	**m³ / s**	1.241	1.158	1.074	0.987	0.895	0.676	0.381	0.096					24.4	N38	0.94	2.40	0.25	Inlet	54
		W / (L/s)	0.32	0.34	0.36	0.40	0.45	0.62	1.12	3.74										Outlet	-
SSMF500/4-4-3	1390	**m³ / s**	**2.403**	**2.352**	**2.300**	**2.247**	**2.192**	**2.078**	**1.957**	**1.828**	**1.689**	**1.540**	**1.378**	**1.010**	28.7	N36	4.30	15.50	1.50	Inlet	68
		W / (L/s)	0.85	0.87	0.89	0.91	0.93	0.97	1.03	1.09	1.17	1.27	1.40	1.83						Outlet	-
SSMF500/6-5-3	890	**m³ / s**	**1.695**	**1.604**	**1.513**	**1.421**	**1.326**	**1.121**	**0.877**	**0.564**	**0.200**				26.2	N38	2.00	6.20	0.55	Inlet	59
		W / (L/s)	0.42	0.45	0.47	0.50	0.53	0.62	0.76	1.12	2.78									Outlet	-
SSMF560/4-2-3	1415	**m³ / s**	**2.779**	**2.728**	**2.676**	**2.624**	**2.570**	**2.460**	**2.344**	**2.221**	**2.090**	**1.946**	**1.787**	**1.394**	35.9	N43	4.30	15.50	1.50	Inlet	69
		W / (L/s)	0.67	0.69	0.72	0.74	0.76	0.81	0.86	0.92	0.98	1.05	1.14	1.44						Outlet	-
SSMF560/4-4-3	1435	**m³ / s**	**3.871**	**3.806**	**3.741**	**3.676**	**3.611**	**3.478**	**3.343**	**3.203**	**3.057**	**2.905**	**2.743**	**2.382**	38.1	N43	6.78	47.50	3.00	Inlet	70
		W / (L/s)	0.83	0.85	0.87	0.88	0.90	0.94	0.97	1.01	1.06	1.10	1.16	1.32						Outlet	-
SSMF560/6-3-3	875	**m³ / s**	**2.094**	**2.003**	**1.910**	**1.812**	**1.709**	**1.481**	**1.206**	**0.864**	**0.494**				31.2	N42	2.00	6.20	0.55	Inlet	70
		W / (L/s)	0.36	0.39	0.41	0.44	0.46	0.53	0.64	0.86	1.39									Outlet	-
SSMF630/6-3-3	965	**m³ / s**	**3.526**	**3.420**	**3.312**	**3.202**	**3.090**	**2.857**	**2.608**	**2.336**	**2.035**	**1.693**	**1.301**	**0.430**	-	-	5.36	30.50	2.20	Inlet	67
		W / (L/s)	-	-	-	-	-	-	-	-	-	-	-	-						Outlet	-

Overall static efficiency and r/min values are as per ISO 12759 installation category C.
FLC Amps @ 400V / 3Ph / 50Hz. Data provided at standard air density of 1.2 kg/m³.
The overall A-weighted sound pressure level is at a distance of 3m with spherical free-field propagation.
It is expressed in dB re-20μPa and is presented for comparative purposes only.

Elta Fans Limited has a policy of continuous product development and improvement and therefore reserves the right to supply products which may differ from those illustrated and described in this publication.
Confirmation of dimensions and data will be supplied on request.

Skyflow SSMF

Sound Data

AC

THREE Phase - 380V to 415V / 50Hz

Product Code	Speed r/min		Sound Power Level dBW @ Octave Band Hz								Total dB
			63Hz	125Hz	250Hz	500Hz	1 kHz	2 kHz	4 kHz	8 kHz	
SSMF315/4-5-3	1330	Inlet	87	82	85	75	73	68	63	57	90
		Outlet	-	-	-	-	-	-	-	-	-
SSMF315/6-5-3	935	Inlet	81	76	69	64	62	56	50	43	83
		Outlet	-	-	-	-	-	-	-	-	-
SSMF350/4-5-3	1330	Inlet	91	85	87	75	72	69	64	58	93
		Outlet	-	-	-	-	-	-	-	-	-
SSMF350/6-5-3	885	Inlet	82	79	74	66	64	59	53	46	84
		Outlet	-	-	-	-	-	-	-	-	-
SSMF400/4-5-3	1380	Inlet	94	91	90	81	79	78	74	68	97
		Outlet	-	-	-	-	-	-	-	-	-
SSMF400/6-5-3	820	Inlet	84	81	75	68	66	63	58	51	86
		Outlet	-	-	-	-	-	-	-	-	-
SSMF450/4-4-3	1390	Inlet	93	90	87	79	79	77	72	65	96
		Outlet	-	-	-	-	-	-	-	-	-
SSMF450/6-5-3	935	Inlet	86	83	76	71	70	66	60	53	88
		Outlet	-	-	-	-	-	-	-	-	-
SSMF500/4-4-3	1390	Inlet	96	93	89	84	81	82	79	73	99
		Outlet	-	-	-	-	-	-	-	-	-
SSMF500/6-5-3	890	Inlet	91	86	81	74	74	72	66	60	93
		Outlet	-	-	-	-	-	-	-	-	-
SSMF560/4-2-3	1415	Inlet	92	92	90	89	85	81	77	71	97
		Outlet	-	-	-	-	-	-	-	-	-
SSMF560/4-4-3	1435	Inlet	93	93	91	90	86	82	78	72	98
		Outlet	-	-	-	-	-	-	-	-	-
SSMF560/6-3-3	875	Inlet	93	93	91	90	86	82	78	72	98
		Outlet	-	-	-	-	-	-	-	-	-
SSMF630/6-3-3	965	Inlet	94	92	86	85	82	80	75	69	97
		Outlet	-	-	-	-	-	-	-	-	-

Tests and preparation of the sound data have been carried out in accordance with BS 848 Part 2:1985 at 50% peak pressure.
The Sound Power Level Spectra are in dB re-1pW.

Elta Fans Limited has a policy of continuous product development and improvement and therefore reserves the right to supply products which may differ from those illustrated and described in this publication.
Confirmation of dimensions and data will be supplied on request.

Skyflow SSMF

Accessories & Wiring Data

AC

For more information on Accessories & Wiring Diagrams, please see individual product downloads, or visit eltaselect.com/information-centre

SINGLE Phase - 220V to 240V / 50Hz

Product Code	Electronic Controller	Transformer Controller	Backdraft Shutter	Purlin Box	Soaker Sheet	Drop in Silencer 600mm Long	Drop in Silencer 900mm Long	Drop in Silencer 1200mm Long	Wiring Diagram No.
SSMF315/4-5-2	149-EL31TK	149-TC14	SSMF-SHUT-31	039B-PB31/35	039-SP31/35	068-SFDS-0600-A	068-SFDS-0900-A	068-SFDS-1200-A	152-500
SSMF315/6-5-2	149-EL31TK	149-TC12	SSMF-SHUT-31	039B-PB31/35	039-SP31/35	068-SFDS-0600-A	068-SFDS-0900-A	068-SFDS-1200-A	152-500
SSMF350/4-4-2	149-EL31TK	149-TC14	SSMF-SHUT-35/40	039B-PB40/45	039-SP40/45	068-SFDS-0600-B	068-SFDS-0900-B	068-SFDS-1200-B	152-500
SSMF350/6-5-2	149-EL31TK	149-TC12	SSMF-SHUT-35/40	039B-PB40/45	039-SP40/45	068-SFDS-0600-B	068-SFDS-0900-B	068-SFDS-1200-B	152-500
SSMF400/4-5-2	149-EL61TK	149-TC18	SSMF-SHUT-35/40	039B-PB40/45	039-SP40/45	068-SFDS-0600-B	068-SFDS-0900-B	068-SFDS-1200-B	152-500
SSMF400/6-5-2	149-EL31TK	149-TC12	SSMF-SHUT-35/40	039B-PB40/45	039-SP40/45	068-SFDS-0600-B	068-SFDS-0900-B	068-SFDS-1200-B	152-500
SSMF450/4-4-2	149-EL61TK	149-TC18	SSMF-SHUT-45/50	039B-PB50/56	039-SP50/56	068-SFDS-0600-C	068-SFDS-0900-C	068-SFDS-1200-C	152-500
SSMF450/6-5-2	149-EL61TK	149-TC18	SSMF-SHUT-45/50	039B-PB50/56	039-SP50/56	068-SFDS-0600-C	068-SFDS-0900-C	068-SFDS-1200-C	152-500
SSMF500/6-5-2	149-EL101	149-TC18	SSMF-SHUT-45/50	039B-PB50/56	039-SP50/56	068-SFDS-0600-C	068-SFDS-0900-C	068-SFDS-1200-C	152-500
SSMF560/6-3-2	149-EL101	149-TC18	SSMF-SHUT-56/63	039B-PB63/71	039-SP63/71	068-SFDS-0600-D	068-SFDS-0900-D	068-SFDS-1200-D	152-500

THREE Phase - 380V to 415V / 50Hz

Product Code	Transformer Controller	Inverter Controller 3PH-3PH IP55	Inverter Controller 3PH-3PH IP20	Backdraft Shutter	Purlin Box	Soaker Sheet
SSMF315/4-5-3	149-TC33	149-ODE-2-14075-3KA1S	149-ODE-2-14075-3KA12	SSMF-SHUT-31	039B-PB31/35	039-SP31/35
SSMF315/6-5-3	149-TC33	149-ODE-2-14075-3KA1S	149-ODE-2-14075-3KA12	SSMF-SHUT-31	039B-PB31/35	039-SP31/35
SSMF350/4-5-3	149-TC33	149-ODE-2-14075-3KA1S	149-ODE-2-14075-3KA12	SSMF-SHUT-35/40	039B-PB40/45	039-SP40/45
SSMF350/6-5-3	149-TC33	149-ODE-2-14075-3KA1S	149-ODE-2-14075-3KA12	SSMF-SHUT-35/40	039B-PB40/45	039-SP40/45
SSMF400/4-5-3	149-TC33	149-ODE-2-14075-3KA1S	149-ODE-2-14075-3KA12	SSMF-SHUT-35/40	039B-PB40/45	039-SP40/45
SSMF400/6-5-3	149-TC33	149-ODE-2-14075-3KA1S	149-ODE-2-14075-3KA12	SSMF-SHUT-35/40	039B-PB40/45	039-SP40/45
SSMF450/4-4-3	149-TC33	149-ODE-2-14075-3KA1S	149-ODE-2-14075-3KA12	SSMF-SHUT-45/50	039B-PB50/56	039-SP50/56
SSMF450/6-5-3	149-TC33	149-ODE-2-14075-3KA1S	149-ODE-2-14075-3KA12	SSMF-SHUT-45/50	039B-PB50/56	039-SP50/56
SSMF500/4-4-3	149-TC310	149-ODE-2-24220-3KA4S	149-ODE-2-24220-3KA42	SSMF-SHUT-45/50	039B-PB50/56	039-SP50/56
SSMF500/6-5-3	149-TC33	149-ODE-2-14075-3KA1S	149-ODE-2-14075-3KA12	SSMF-SHUT-45/50	039B-PB50/56	039-SP50/56
SSMF560/4-2-3	149-TC310	149-ODE-2-24220-3KA4S	149-ODE-2-24220-3KA42	SSMF-SHUT-56/63	039B-PB63/71	039-SP63/71
SSMF560/4-4-3	149-TC310	149-ODE-2-24400-3KA4S	149-ODE-2-24400-3KA42	SSMF-SHUT-56/63	039B-PB63/71	039-SP63/71
SSMF560/6-3-3	149-TC33	149-ODE-2-14075-3KA1S	149-ODE-2-14075-3KA12	SSMF-SHUT-56/63	039B-PB63/71	039-SP63/71
SSMF630/6-3-3	149-TC310	149-ODE-2-24220-3KA4S	149-ODE-2-24220-3KA42	SSMF-SHUT-56/63	039B-PB63/71	039-SP63/71

Product Code	Drop in Silencer 600mm Long	Drop in Silencer 900mm Long	Drop in Silencer 1200mm Long	Wiring Diagram No.
SSMF315/4-5-3	068-SFDS-0600-A	068-SFDS-0900-A	068-SFDS-1200-A	152-608
SSMF315/6-5-3	068-SFDS-0600-A	068-SFDS-0900-A	068-SFDS-1200-A	152-608
SSMF350/4-5-3	068-SFDS-0600-B	068-SFDS-0900-B	068-SFDS-1200-B	152-608
SSMF350/6-5-3	068-SFDS-0600-B	068-SFDS-0900-B	068-SFDS-1200-B	152-608
SSMF400/4-5-3	068-SFDS-0600-B	068-SFDS-0900-B	068-SFDS-1200-B	152-608
SSMF400/6-5-3	068-SFDS-0600-B	068-SFDS-0900-B	068-SFDS-1200-B	152-608
SSMF450/4-4-3	068-SFDS-0600-C	068-SFDS-0900-C	068-SFDS-1200-C	152-608
SSMF450/6-5-3	068-SFDS-0600-C	068-SFDS-0900-C	068-SFDS-1200-C	152-608
SSMF500/4-4-3	068-SFDS-0600-C	068-SFDS-0900-C	068-SFDS-1200-C	152-608
SSMF500/6-5-3	068-SFDS-0600-C	068-SFDS-0900-C	068-SFDS-1200-C	152-608
SSMF560/4-2-3	068-SFDS-0600-D	068-SFDS-0900-D	068-SFDS-1200-D	152-608
SSMF560/4-4-3	068-SFDS-0600-D	068-SFDS-0900-D	068-SFDS-1200-D	152-608
SSMF560/6-3-3	068-SFDS-0600-D	068-SFDS-0900-D	068-SFDS-1200-D	152-608
SSMF630/6-3-3	068-SFDS-0600-D	068-SFDS-0900-D	068-SFDS-1200-D	152-601

Elta Fans Limited has a policy of continuous product development and improvement and therefore reserves the right to supply products which may differ from those illustrated and described in this publication. Confirmation of dimensions and data will be supplied on request.

Skyflow SSMF

Optimum Energy Efficiency Point

AC

SINGLE Phase - 220V to 240V / 50Hz

Product Code	Volume m³/s	Pressure Pa	Input kW	Speed r/min	Efficiency %	FMEG
SSMF315/4-5-2	0.362	162	0.344	1395	17.0	N32
SSMF315/6-5-2	0.233	70	0.163	935	10.1	N28
SSMF350/4-4-2	0.573	187	0.460	1300	23.3	N37
SSMF350/6-5-2	0.392	90	0.192	885	18.3	N36
SSMF400/4-5-2	0.722	261	0.844	1330	22.3	N33
SSMF400/6-5-2	0.471	99	0.231	820	20.1	N37
SSMF450/4-4-2	1.000	264	1.057	1290	25.0	N35
SSMF450/6-5-2	0.760	156	0.623	935	19.1	N31
SSMF500/6-5-2	0.883	229	0.817	875	24.8	N36
SSMF560/6-3-2	0.883	182	0.762	890	21.1	N32

THREE Phase - 380V to 415V / 50Hz

Product Code	Volume m³/s	Pressure Pa	Input kW	Speed r/min	Efficiency %	FMEG
SSMF315/4-5-3	0.347	165	0.328	1330	17.4	N32
SSMF315/6-5-3	0.235	64	0.120	935	12.5	N32
SSMF350/4-5-3	0.559	197	0.481	1330	22.9	N36
SSMF350/6-5-3	0.452	92	0.185	885	22.5	N40
SSMF400/4-5-3	0.814	310	0.876	1380	28.8	N39
SSMF400/6-5-3	0.484	109	0.243	820	21.7	N38
SSMF450/4-4-3	1.055	304	1.187	1390	27.0	N36
SSMF450/6-5-3	0.742	136	0.414	935	24.4	N38
SSMF500/4-4-3	1.287	426	1.488	1390	28.7	N36
SSMF500/6-5-3	0.906	195	0.673	890	26.2	N38
SSMF560/4-2-3	1.613	448	2.014	1415	35.9	N43
SSMF560/4-4-3	2.251	532	3.141	1435	38.1	N43
SSMF560/6-3-3	1.150	209	0.771	875	31.2	N43
SSMF630/6-3-3	-	-	-	-	-	-

Data provided at standard air density of 1.2 kg/m³.
Values are per ISO 12759 installation category A (static).

Elta Fans Limited has a policy of continuous product development and improvement and therefore reserves the right to supply products which may differ from those illustrated and described in this publication. Confirmation of dimensions and data will be supplied on request.

Skyflow SSMF

Dimensional Data

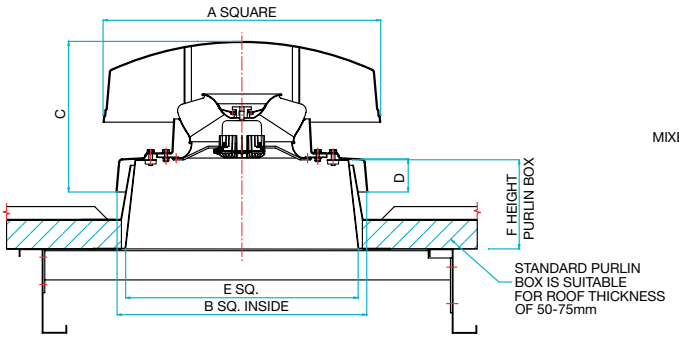

PURLIN MOUNTING UNIT

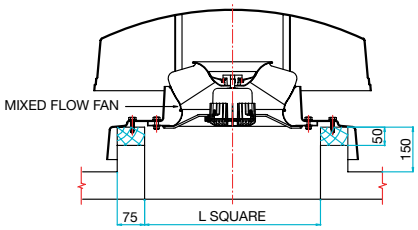

CURB MOUNTING UNIT

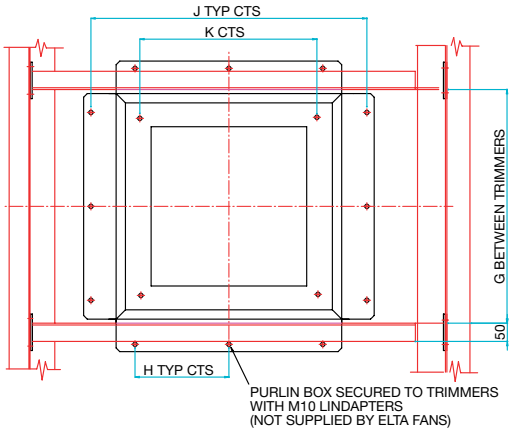

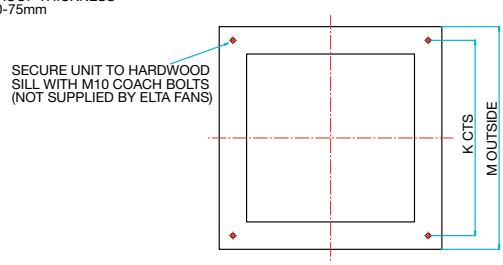

Product Code	A	B	C	D	E	F	G	H	J	K	L	M	Weight kg
SSMF31	710	684	325	85	610	240	636	250	750	500	460	610	20
SSMF35	800	784	445	90	730	250	756	300	870	600	550	700	25
SSMF40	800	784	445	90	730	250	756	300	870	600	550	700	27
SSMF45	960	934	510	100	860	250	886	350	1000	745	700	850	40
SSMF50	960	934	510	100	860	250	886	350	1000	745	700	850	42
SSMF56	1230	1054	590	105	1000	250	1026	435	1140	870	830	980	82
SSMF63	1230	1054	590	105	1000	250	1026	435	1140	870	830	980	90

All dimensions are shown in mm.

Elta Fans Limited has a policy of continuous product development and improvement and therefore reserves the right to supply products which may differ from those illustrated and described in this publication. Confirmation of dimensions and data will be supplied on request.

BUILDING SERVICES

Tel: +44 (0) 1384 275800
Fax: +44 (0) 1384 275810
e-mail: bs@eltafans.co.uk

46 Third Avenue
Pensnett Trading Estate
Kingswinford, West Midlands
DY6 7US, United Kingdom

APPLIED TECHNOLOGY

Tel: +44 (0) 1489 566500
Fax: +44 (0) 1489 566555
e-mail: at@eltafans.co.uk

17 Barnes Wallis Road
Segensworth East Industrial Estate
Fareham, Hampshire
PO15 5ST, United Kingdom

EXPORT

Tel: +44 (0) 1489 566500
Fax: +44 (0) 1489 566555
e-mail: export@eltafans.co.uk

17 Barnes Wallis Road
Segensworth East Industrial Estate
Fareham, Hampshire
PO15 5ST, United Kingdom

www.eltafans.com

BS EN ISO 9001:2008
FM 556465

A member of
HEVAC ASSOCIATION

CIBSE
PATRONS

A member of ELTA GROUP LIMITED