ELTA SELECT

Raptor ATEX

t: **01384 275800**
f: **01384 275810**
e: **bs@eltafans.co.uk**
visit: **eltaselect.com**

Catalogue Guide

Icon Key

info

The Select Catalogue has a number of symbols and icons, designed to make the catalogue quicker and easier to use. An explanation of these are listed below:

Application Icons

Applications are now represented via a set of pictorial icons. The application icons key is featured on the facing page. Some applications have been grouped together, where the environmental conditions have similarities.

New Products

NEW PRODUCT

The icon to the right indicates a new addition to the Select product range. This will be displayed on the introductory page of each product and can also be seen on the contents page for each category.

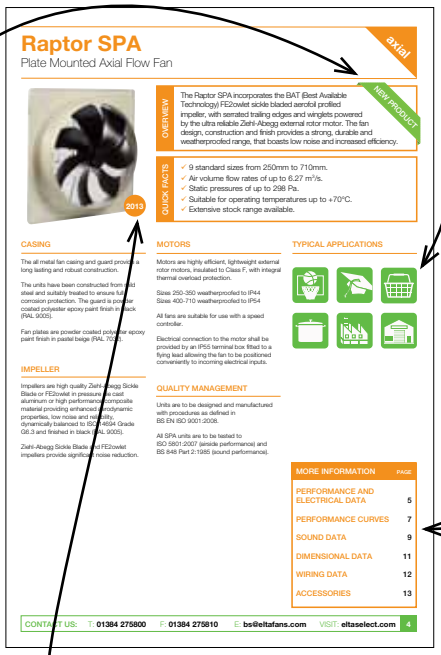

Raptor SPA

Plate Mounted Axial Flow Fan

Axial

NEW PRODUCT

OVERVIEW

The Raptor SPA incorporates the BAT (Best Available Technology) FE2owlet sickle bladed aerofoil profiled impeller, with serrated trailing edges and winglets powered by the ultra reliable Ziehl-Abegg external rotor motor. The fan design, construction and finish provides a strong, durable and weatherproofed range, that boasts low noise and increased efficiency.

QUICK FACTS

- 9 standard sizes from 250mm to 710mm.
- Air volume flow rates of up to 6.27 m³/s.
- Static pressures of up to 298 Pa.
- Suitable for operating temperatures up to +70°C.
- Extensive stock range available.

2013

CASING

The all metal fan casing and guard provide a long lasting and robust construction.

The units have been constructed from mild steel and suitably treated to ensure full corrosion protection. The guard is powder coated polyester epoxy paint finish in black (RAL 9005).

Fan plates are powder coated polyester epoxy paint finish in pastel beige (RAL 7032).

IMPELLER

Impellers are high quality Ziehl-Abegg Sickle Blade or FE2owlet in pressure cast aluminum or high performance composite material providing enhanced aerodynamic properties, low noise and reliability, dynamically balanced to ISO 21940 Grade G6.3 and finished in black (RAL 9005).

Ziehl-Abegg Sickle Blade and FE2owlet impellers provide significant noise reduction.

MOTORS

Motors are highly efficient, lightweight external rotor motors, insulated to Class F, with integral thermal overload protection.

Sizes 250-350 weatherproofed to IP44
Sizes 400-710 weatherproofed to IP54

All fans are suitable for use with a speed controller.

Electrical connection to the motor shall be provided by an IP55 terminal box fitted to a flying lead allowing the fan to be positioned conveniently to incoming electrical inputs.

QUALITY MANAGEMENT

Units are to be designed and manufactured with procedures as defined in BS EN ISO 9001:2008.

All SPA units are to be tested to ISO 5801:2007 (airside performance) and BS 848 Part 2:1985 (sound performance).

TYPICAL APPLICATIONS

MORE INFORMATION PAGE

PERFORMANCE AND ELECTRICAL DATA	5
PERFORMANCE CURVES	7
SOUND DATA	9
DIMENSIONAL DATA	11
WIRING DATA	12
ACCESSORIES	13

CONTACT US: T: 01384 275800 F: 01384 275810 E: bs@eltafans.com VISIT: eltaselect.com 4

More Information Box

A more information box now also features on each introductory product page. This makes it easier to locate any further information you may require by displaying the page number to refer to, or directing you to the website - www.eltaselect.com.

2013

2013

New legislation has driven change in the Elta Select range of products. Elta Fans have revolutionised both their new and existing product range to meet legislation directives, but also to incorporate the 'Best Available Technology'; creating a reliable efficient and powerful range of products. The products which conform to the 2013 legislation are indicated with the above logo. This logo is pictured both on the main product page and the category contents page.

Catalogue Guide

Application Key

info

Each product has an indication of typical applications via a set of icons.
Every icon is displayed below, along with the definition of what it represents.

Sports Hall
Squash Courts
Gymnasium

Schools
Colleges

Shopping Mall

Shops
Retail Parks
Commercial

Kitchens

Factories
Industrial Units

Warehousing

Shower Rooms
Bathrooms
Toilets
Changing Rooms

Marine

Agriculture

Airports

Corrosive
Atmospheres

Banks

Hospitals

Hotels

Restaurants
Cafes
Cafeterias
Pubs

Theatres

Air Conditioning

Residential
Public Buildings
Entrance Halls

Underground
Stations

Libraries

Offices

Laundries
Utility Rooms

Temporary
Ventilation
Construction
Sites

Enclosed Car
Parks

Stairwell
Pressurisation

Workshops
Foundries
Welding Bays
Machine Shops
Spray Booths
Lift Motor Rooms

Marquees

Conference Halls

Cooling Towers
Stations
Boiler Houses
Heavy Industrial

Hot Gas
Situations

General HVAC

Raptor SFB

ATEX Plate Mounted Axial Flow Fan

ATEX

NEW PRODUCT

OVERVIEW

The Raptor SFB is a range of Ziehl-Abegg ATEX rated plate mounted axial fans for internal mounting, manufactured in mild steel with a RAL9005 paint finish. These units are designed to meet the requirements for Hazardous Areas.

QUICK FACTS

- ✓ 4 standard sizes from 350mm to 650mm.
- ✓ Air volume flow rates of up to 2.57 m³/s.
- ✓ Static pressure of up to 125 Pa.
- ✓ Suitable for operating temperatures up to +40°C.
- ✓ Suitable for extract or supply systems.

CASING

The all metal fan casing and guard provides a long lasting and robust construction.

The units have been constructed from mild steel and suitably treated to ensure full corrosion protection, the guard shall be powder coated polyester epoxy paint finish in black (RAL 9005).

Fan plates shall have a surface coated to fulfil the requirements in DIN EN 13463-1 regarding electrostatic charges with paint finish in black (RAL 9005).

IMPELLER

Pressed aluminium impellers providing low noise and increased efficiency with protective measures between rotating and stationary components, dynamically balanced to ISO 14694 Grade G6.3, and finished in black (RAL 9005).

MOTORS

Motors are Ziehl-Abegg, highly efficient, lightweight external rotor motors with sealed for life, maintenance free ball bearings; which allows the fan to be installed at any angle. Motors are all suitable for speed control and each motor has temperature monitoring by integrated PTC Thermistor.

Motors according to: Gas, Zone and ignition temperature. Protection to Ex II 2G c Ex e IIB T4 classified for constructional safety and fulfil the requirements stated in 94/4/EU (ATEX) directive.

Fans are suitable for operating temperatures between -20°C and +40°C.

Electrical connection to the motor is via a 650mm long flying lead.

QUALITY MANAGEMENT

Units are to be designed and manufactured with procedures as defined in BS EN ISO 9001:2008.

All SFB units are to be tested to ISO 5801:2007 (airside performance) and BS 848 Part 2:1985 (sound performance).

TYPICAL APPLICATIONS

MORE INFORMATION

	PAGE
PERFORMANCE AND ELECTRICAL DATA	5
PERFORMANCE CURVES	5
SOUND DATA	5
DIMENSIONAL DATA	6
WIRING DATA	6
ACCESSORIES	6

Raptor SFB

Performance and Electrical Data

THREE Phase - 380V-415V / 50Hz

Product Code	Speed r/min	Airflow SFP	Airflow m³/s @ Static Pressure Pa.						Overall Efficiency %	FMEG	Motor Electrical Data		
			0	25	50	75	100	125			FLC Amps	SC Amps	Input kW
SFB035-VDE.4Y.A4P	1428	**m³/s**	**0.71**	**0.65**	**0.59**	**0.50**			28.7	-	0.27	1.215	0.145
		W/(L/s)	0.14	0.18	0.21	0.26							
SFB042-VDE.4Y.A4P	1402	**m³/s**	**1.24**	**1.18**	**1.09**	**0.99**	**0.86**	**0.65**	29.9	-	0.60	2.76	0.310
		W/(L/s)	0.17	0.20	0.23	0.27	0.34	0.47					
SFB056-SDE.4Y.A4P	914	**m³/s**	**1.84**	**1.66**	**1.42**				26.3	-	0.58	2.146	0.307
		W/(L/s)	0.13	0.16	0.20								
SFB065-SDE.4Y.A4P	894	**m³/s**	**2.57**	**2.35**	**2.10**	**1.79**			31.6	-	0.80	2.96	0.439
		W/(L/s)	0.12	0.15	0.18	0.24							

Performance Curves

THREE Phase - 380-415V/50Hz

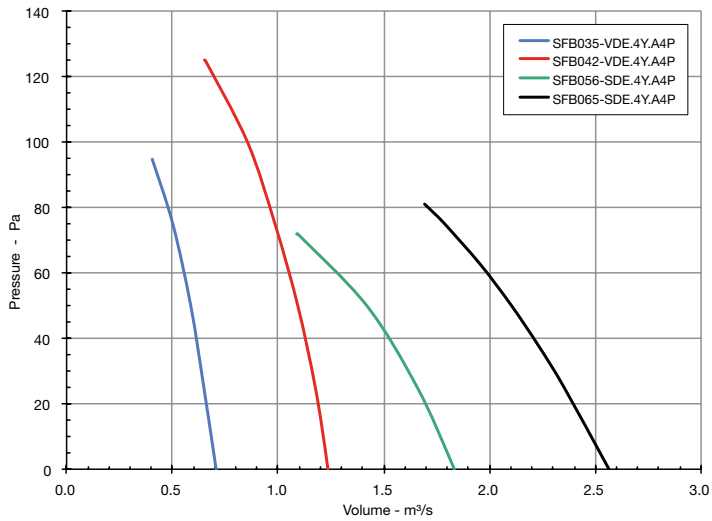

Sound Data

THREE Phase - 380V-415V / 50Hz

Product Code	Sound Power Level dBW @ Octave Band Hz								dBA @ 3m
	63Hz	125Hz	250Hz	500Hz	1 kHz	2 kHz	4 kHz	8 kHz	
SFB035-VDE.4Y.A4P	74	75	72	67	66	64	57	48	51
SFB042-VDE.4Y.A4P	72	79	75	72	70	69	63	54	55
SFB056-SDE.4Y.A4P	79	73	69	68	65	57	51	45	49
SFB065-SDE.4Y.A4P	84	75	73	71	71	69	62	53	54

Tests and preparation of the sound data have been carried out in accordance with BS 848 Part 2:1985 at 50% peak pressure.
The Sound Power Level Spectra are in dB re-1pW.
The overall A-weighted sound pressure level is at a distance of 3m with spherical free-field propagation. It is expressed in dB re-20µPa and is presented for comparative purposes only.

Raptor SFB

Dimensional Data

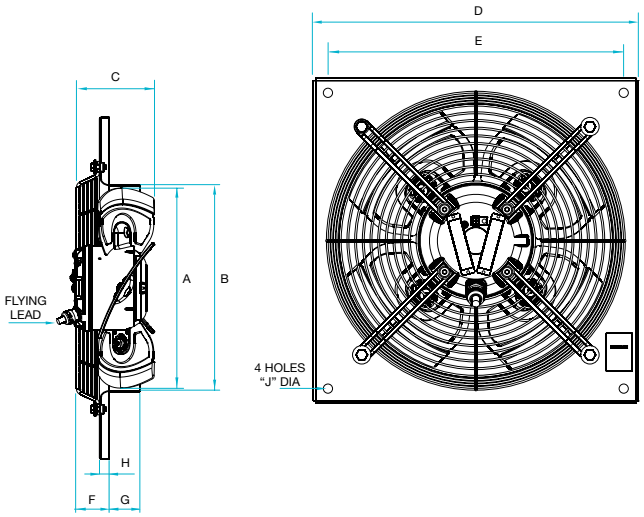

Product Code	A	B	C	D	E	F	G	H	J	Weight kg
SFB035-VDE.4Y.A4P	347	359	135	423	385	56	54	16	12	9
SFB042-VDE.4Y.A4P	416	435	135	503	460	62	54	16	14.5	11.5
SFB056-SDE.4Y.A4P	546	567	161	650	610	70	60	18	14.5	16
SFB065-SDE.4Y.A4P	644	667	182	770	730	80	60	18	14.5	20

All dimensions are shown in mm.

Wiring Data

Please see our Wiring Diagrams download on www.eltaselect.com for more information.

THREE Phase - 380V-415V / 50Hz

Product Code	Wiring Diagram No.
SFB035-VDE.4Y.A4P	152-109
SFB042-VDE.4Y.A4P	152-109
SFB056-SDE.4Y.A4P	152-109
SFB065-SDE.4Y.A4P	152-109

Accessories

Please see our ATEX Accessories download on www.eltaselect.com for more information.

THREE Phase - 380V-415V / 50Hz

Product Code	Transformer Controller	Thermistor Protection Relay	IP54 Protection Relay Enclosure
SFB035-VDE.4Y.A4P	149-TC33	149-U-EK230E	149-U-EK230E-HOUSING
SFB042-VDE.4Y.A4P	149-TC33	149-U-EK230E	149-U-EK230E-HOUSING
SFB056-SDE.4Y.A4P	149-TC33	149-U-EK230E	149-U-EK230E-HOUSING
SFB065-SDE.4Y.A4P	149-TC33	149-U-EK230E	149-U-EK230E-HOUSING

Note: The controller is not ATEX rated and must be positioned outside the hazardous area.

BUILDING SERVICES

Tel: +44 (0) 1384 275800
Fax: +44 (0) 1384 275810
e-mail: bs@eltafans.co.uk

46 Third Avenue
Pensnett Trading Estate
Kingswinford, West Midlands
DY6 7US, United Kingdom

APPLIED TECHNOLOGY

Tel: +44 (0) 1489 566500
Fax: +44 (0) 1489 566555
e-mail: at@eltafans.co.uk

17 Barnes Wallis Road
Segnesworth East Industrial Estate
Fareham, Hampshire
PO15 5ST, United Kingdom

EXPORT

Tel: +44 (0) 1489 566500
Fax: +44 (0) 1489 566555
e-mail: export@eltafans.co.uk

17 Barnes Wallis Road
Segnesworth East Industrial Estate
Fareham, Hampshire
PO15 5ST, United Kingdom

www.eltafans.com

BS EN ISO 9001:2008
FM 556465

A member of
HEVAC ASSOCIATION

PATRONS

A member of ELTA GROUP LIMITED