ELTA SELECT

SmokeVent SLCS

Product Brochure

t: **01384 275800**
f: **01384 275810**
e: **bs@eltafans.co.uk**
visit: **eltaselect.com**

SmokeVent SLCS

Smoke Ventilating Long Case Axial Flow Fan

+300°C
for 2 hours
(MCR Prior)

smoke

OVERVIEW

Featuring our new high efficiency impeller, the SmokeVent SLCS range has been specifically developed for emergency smoke spill extract systems to operate as part of the main extract system or as dedicated fans for emergency clearance to overcome hazardous fire, smoke or fume conditions. SLCS is a selection from a full range of EN12101-3 certified smoke extract fans up to 2m diameter at +300°C for 2 hours and up to 1250mm at +400°C for 2 hours.

MORE INFORMATION

MORE INFORMATION	AC PAGE NO.
Performance, SFP & Electrical Data	3
Sound Data	4
Accessories & Wiring Data	5
Optimum Energy Efficiency Point	6
Dimensional Data	7

QUICK FACTS

- ✓ 5 standard sizes from 400mm to 710mm.
- ✓ Air volume flow rates up to 7.86 m³/s.
- ✓ Static pressure up to 800 Pa.
- ✓ Suitable for normal continuous duty and a once only use under smoke operation at +300°C for 2 hours.

CASING

The all metal fan casing provides a long lasting and robust construction. The units have been constructed from a single sheet of steel, with both motors and axial impellers mounted within the length of the unit casing.

All casing parts are heavy gauge mild steel sheet, roll formed and welded, then hot dip galvanised to BS EN ISO 1461:1999 after fabrication.

IMPELLER

Adjustable pitch aerofoil impellers are provided with blades made from high quality pressure die cast aluminium (LM6) natural finish.

Impellers are factory set at an angle to provide maximum performance.

The hubs are manufactured from die cast aluminium alloy (LM24).

Assembled impellers are to be dynamically balanced to ISO 14694 Grade G6.3.

MOTORS

Motors are to be pad mounted totally enclosed metric type to IP55, with sealed for life bearings, standard industrial paint finish and Class H insulation to EN 60034-5, suitable for use at normal continuous duty and a once only use under smoke operation at +300°C for 2 hours.

Flying leads are brought out via a temperature resistant conduit system, to an external IP55 terminal box for customer cabling interface.

QUALITY MANAGEMENT

Units are to be certified to EN12101-3. Units are to be designed and manufactured with procedures as defined in BS EN ISO 9001:2008.

All SLCS units are to be tested to ISO 5801:2007 (airside performance) and BS 848 Part 2:1985 (sound performance).

TYPICAL APPLICATIONS

- Shopping Mall
- Stairwell Pressurisation
- Enclosed Carparks
- Residential and Public Buildings
- Underground Stations and Theatres

Elta Fans Limited has a policy of continuous product development and improvement and therefore reserves the right to supply products which may differ from those illustrated and described in this publication. Confirmation of dimensions and data will be supplied on request.

SmokeVent SLCS

Performance & Electrical Data

AC

THREE Phase - 380V to 415V / 50Hz

Product Code	Speed r/min	Airflow SFP	Airflow m³/s @ Static Pressure Pa.												Overall Efficiency %	FMEG	Motor Electrical Data		dBA @ 3m	
			0	25	50	75	100	150	200	250	300	350	400	500			FLC Amps	Input kW		
SLCS400/4-3AC	1465	m³ / s	1.476	1.388	1.292	1.195									36.6	N45	1.51	0.430	Inlet	53
		W / (L/s)	0.27	0.29	0.32	0.36													Outlet	53
SLCS400/2A-3AC	2706	m³ / s	2.207	2.179	2.149	2.119	2.088	2.022	1.949	1.868	1.772				46.0	N51	2.69	1.620	Inlet	70
		W / (L/s)	0.54	0.57	0.61	0.64	0.67	0.73	0.79	0.85	0.91								Outlet	68
SLCS400/2B-3AC	2890	m³ / s	3.178	3.130	3.079	3.027	2.973	2.864	2.758	2.652	2.546	2.435			42.9	N46	6.73	3.290	Inlet	68
		W / (L/s)	0.99	1.01	1.03	1.05	1.08	1.13	1.18	1.24	1.29	1.35							Outlet	66
SLCS500/4A-3AC	1430	m³ / s	2.462	2.351	2.238	2.120	1.984								43.4	N50	1.51	0.740	Inlet	61
		W / (L/s)	0.25	0.28	0.31	0.34	0.37												Outlet	60
SLCS500/4B-3AC	1470	m³ / s	3.081	2.947	2.801	2.647	2.489								42.5	N48	2.84	1.150	Inlet	62
		W / (L/s)	0.37	0.39	0.41	0.43	0.46												Outlet	59
SLCS500/2A-3AC	2840	m³ / s	3.700	3.654	3.609	3.564	3.520	3.429	3.334	3.231	3.117	2.985	2.829	2.426	49.4	N52	5.31	3.060	Inlet	77
		W / (L/s)	0.63	0.65	0.67	0.69	0.72	0.76	0.81	0.87	0.92	0.99	1.06	1.25					Outlet	79
SLCS500/2B-3AC	2895	m³ / s	5.386	5.328	5.271	5.213	5.154	5.035	4.913	4.787	4.656	4.518	4.371		48.3	N49	11.80	6.340	Inlet	77
		W / (L/s)	1.04	1.06	1.08	1.11	1.13	1.19	1.24	1.29	1.35	1.40	1.45						Outlet	77
SLCS560/4A-3AC	1435	m³ / s	2.587	2.498	2.374	2.231	2.090								47.7	N55	1.51	0.680	Inlet	63
		W / (L/s)	0.21	0.22	0.25	0.28	0.31												Outlet	61
SLCS560/4B-3AC	1465	m³ / s	3.865	3.746	3.618	3.478	3.323	2.973							50.2	N55	3.81	1.420	Inlet	65
		W / (L/s)	0.33	0.35	0.37	0.39	0.42	0.48											Outlet	61
SLCS630/4A-3AC	1430	m³ / s	4.630	4.474	4.316	4.153	3.981	3.590							50.0	N55	2.84	1.650	Inlet	65
		W / (L/s)	0.29	0.31	0.34	0.37	0.40	0.46											Outlet	65
SLCS630/4B-3AC	1465	m³ / s	6.136	5.946	5.759	5.572	5.382	4.972							53.0	N56	5.89	2.850	Inlet	64
		W / (L/s)	0.45	0.47	0.49	0.51	0.53	0.57											Outlet	64
SLCS710/4A-3AC	1390	m³ / s	5.980	5.860	5.730	5.600	5.470	5.170	4.830	4.360					50.0	N53	5.23	2.900	Inlet	68
		W / (L/s)	0.34	0.37	0.40	0.43	0.45	0.51	0.58	0.66									Outlet	67
SLCS710/4B-3AC	1410	m³ / s	8.170	8.020	7.860	7.690	7.510	7.150	6.730	6.240					48.8	N50	9.69	5.230	Inlet	70
		W / (L/s)	0.57	0.59	0.62	0.64	0.66	0.71	0.77	0.84									Outlet	70

Overall total efficiency, r/min and FMEG values are as per ISO 12759 installation category D.
Data provided at standard air density of 1.2 kg/m³.
Tests and preparation of the sound data have been carried out in accordance with BS 848 Part 2:1985 at 50% peak pressure.
The Sound Power Level Spectra are in dB re-1pW.
The overall A-weighted sound pressure level is at a distance of 3m with spherical free-field propagation. It is expressed in dB re-20μPa and is presented for comparative purposes only.

Elta Fans Limited has a policy of continuous product development and improvement and therefore reserves the right to supply products which may differ from those illustrated and described in this publication. Confirmation of dimensions and data will be supplied on request.

SmokeVent SLCS

Sound Data

AC

THREE Phase - 380V to 415V / 50Hz

Product Code		Sound Power Level dBW @ Octave Band Hz								Total db
		63 Hz	125 Hz	250 Hz	500 Hz	1k Hz	2k Hz	4k Hz	8k Hz	
SLCS400/2A-3AC	Inlet	-	-	-	-	-	-	-	-	-
	Outlet	-	-	-	-	-	-	-	-	-
SLCS400/2B-3AC	Inlet	-	-	-	-	-	-	-	-	-
	Outlet	-	-	-	-	-	-	-	-	-
SLCS400/4-3AC	Inlet	-	-	-	-	-	-	-	-	-
	Outlet	-	-	-	-	-	-	-	-	-
SLCS500/2A-3AC	Inlet	-	-	-	-	-	-	-	-	-
	Outlet	-	-	-	-	-	-	-	-	-
SLCS500/2B-3AC	Inlet	-	-	-	-	-	-	-	-	-
	Outlet	-	-	-	-	-	-	-	-	-
SLCS500/4A-3AC	Inlet	-	-	-	-	-	-	-	-	-
	Outlet	-	-	-	-	-	-	-	-	-
SLCS500/4B-3AC	Inlet	-	-	-	-	-	-	-	-	-
	Outlet	-	-	-	-	-	-	-	-	-
SLCS560/4A-3AC	Inlet	-	-	-	-	-	-	-	-	-
	Outlet	-	-	-	-	-	-	-	-	-
SLCS560/4B-3AC	Inlet	-	-	-	-	-	-	-	-	-
	Outlet	-	-	-	-	-	-	-	-	-
SLCS630/4A-3AC	Inlet	-	-	-	-	-	-	-	-	-
	Outlet	-	-	-	-	-	-	-	-	-
SLCS630/4B-3AC	Inlet	-	-	-	-	-	-	-	-	-
	Outlet	-	-	-	-	-	-	-	-	-
SLCS710/4A-3AC	Inlet	-	-	-	-	-	-	-	-	-
	Outlet	-	-	-	-	-	-	-	-	-
SLCS710/4B-3AC	Inlet	-	-	-	-	-	-	-	-	-
	Outlet	-	-	-	-	-	-	-	-	-

Please contact Elat Fans for sound data.

The Sound Power Level Spectra are in dB re-1pW.

Elta Fans Limited has a policy of continuous product development and improvement and therefore reserves the right to supply products which may differ from those illustrated and described in this publication. Confirmation of dimensions and data will be supplied on request.

SmokeVent SLCS

Accessories & Wiring Data

For more information on Accessories & Wiring Diagrams, please see individual product downloads, or visit eltaselect.com/information-centre

THREE Phase - 380V to 415V / 50Hz

Product Code	Inverter Controller 3PH-3PH IP20	Inverter Controller 3PH-3PH IP55	Impeller Side Guard	Ancillary Pack*	Mounting Feet (each)	Matching Flanges (each)	Flexible Connections (each)	AV Mounts (set of 4)
SLCS400/2A-3AC	149-CFW701A03P6	149-AFW701A03P6	078C-0400-C	APKS400/20/20B	060B-0400	061B-0400	063-0400-PU250	062-ES20/20
SLCS400/2B-3AC	149-CFW701A10P0	149-AFW701A10P0	078C-0400-C	APKS400/20/20B	060B-0400	061B-0400	063-0400-PU250	062-ES20/20
SLCS400/4-3AC	149-CFW701A03P6	149-AFW701A03P6	078C-0400-C	APKS400/20/20B	060B-0400	061B-0400	063-0400-PU250	062-ES20/20
SLCS500/2A-3AC	149-CFW701A07P0	149-AFW701A07P0	078C-0500-C	APKS500/20/40B	060B-0500	061B-0500	063-0500-PU250	062-ES20/40
SLCS500/2B-3AC	149-CFW701B17P0	149-AFW701B17P0	078C-0500-C	APKS500/20/40B	060B-0500	061B-0500	063-0500-PU250	062-ES20/40
SLCS500/4A-3AC	149-CFW701A03P6	149-AFW701A03P6	078C-0500-C	APKS500/20/20B	060B-0500	061B-0500	063-0500-PU250	062-ES20/20
SLCS500/4B-3AC	149-CFW701A03P6	149-AFW701A03P6	078C-0500-C	APKS500/20/20B	060B-0500	061B-0500	063-0500-PU250	062-ES20/20
SLCS560/4A-3AC	149-CFW701A03P6	149-AFW701A03P6	078C-0560-C	APKS560/20/40B	060B-0560	061B-0560	063-0560-PU250	062-ES20/40
SLCS560/4B-3AC	149-CFW701A05P0	149-AFW701A05P0	078C-0560-C	APKS560/20/40B	060B-0560	061B-0560	063-0560-PU250	062-ES20/40
SLCS630/4A-3AC	149-CFW701A03P6	149-AFW701A03P6	078C-0630-C	APKS630/20/40B	060B-0630	061B-0630	063-0630-PU250	062-ES20/40
SLCS630/4B-3AC	149-CFW701A07P0	149-AFW701A07P0	078C-0630-C	APKS630/20/40B	060B-0630	061B-0630	063-0630-PU250	062-ES20/40
SLCS710/4A-3AC	149-CFW701A07P0	149-AFW701A07P0	078C-0710-C	APKS710/20/70B	060B-0710	061B-0710	063-0710-PU250	062-ES20/70
SLCS710/4B-3AC	149-CFW701A13P5	149-AFW701A13P5	078C-0710-C	APKS710/20/70B	060B-0710	061B-0710	063-0710-PU250	062-ES20/70

*Consists of Flexible Connectors, Matchinag Flanges, AV Mounts and Mounting Feet.

Product Code	Damper	Bell Mouth Inlet	Silencer 1D Podded	Silencer 1D Unpodded	Silencer 2D Podded	Silencer 2D Unpodded	Wiring Diagram No.
SLCS400/2A-3AC	019-0400-STD	241B-0400-BELL	068-0400-1DEP	068-0400-1DENP	068-0400-2DEP	068-0400-2DENP	152-600
SLCS400/2B-3AC	019-0400-STD	241B-0400-BELL	068-0400-1DEP	068-0400-1DENP	068-0400-2DEP	068-0400-2DENP	152-600
SLCS400/4-3AC	019-0400-STD	241B-0400-BELL	068-0400-1DEP	068-0400-1DENP	068-0400-2DEP	068-0400-2DENP	152-600
SLCS500/2A-3AC	019-0500-STD	241B-0500-BELL	068-0500-1DEP	068-0500-1DENP	068-0500-2DEP	068-0500-2DENP	152-600
SLCS500/2B-3AC	019-0500-STD	241B-0500-BELL	068-0500-1DEP	068-0500-1DENP	068-0500-2DEP	068-0500-2DENP	152-601
SLCS500/4A-3AC	019-0500-STD	241B-0500-BELL	068-0500-1DEP	068-0500-1DENP	068-0500-2DEP	068-0500-2DENP	152-600
SLCS500/4B-3AC	019-0500-STD	241B-0500-BELL	068-0500-1DEP	068-0500-1DENP	068-0500-2DEP	068-0500-2DENP	152-600
SLCS560/4A-3AC	019-0560-STD	241B-0560-BELL	068-0560-1DEP	068-0560-1DENP	068-0560-2DEP	068-0560-2DENP	152-600
SLCS560/4B-3AC	019-0560-STD	241B-0560-BELL	068-0560-1DEP	068-0560-1DENP	068-0560-2DEP	068-0560-2DENP	152-600
SLCS630/4A-3AC	019-0630-STD	241B-0630-BELL	068-0630-1DEP	068-0630-1DENP	068-0630-2DEP	068-0630-2DENP	152-600
SLCS630/4B-3AC	019-0630-STD	241B-0630-BELL	068-0630-1DEP	068-0630-1DENP	068-0630-2DEP	068-0630-2DENP	152-600
SLCS710/4A-3AC	019-0710-STD	241B-0710-BELL	068-0710-1DEP	068-0710-1DENP	068-0710-2DEP	068-0710-2DENP	152-600
SLCS710/4B-3AC	019-0710-STD	241B-0710-BELL	068-0710-1DEP	068-0710-1DENP	068-0710-2DEP	068-0710-2DENP	152-601

Elta Fans Limited has a policy of continuous product development and improvement and therefore reserves the right to supply products which may differ from those illustrated and described in this publication. Confirmation of dimensions and data will be supplied on request.

SmokeVent SLCS

Optimum Energy Efficiency Point

SINGLE Phase - 220V to 240V / 50Hz

Product Code	Volume m^3/s	Pressure Pa	Input kW	Speed r/min	Efficiency %	FMEG
SLCS400/2A-3AC	1.750	425	1.620	2760	46.0	N51
SLCS400/2B-3AC	2.340	596	3.250	2890	42.9	N46
SLCS400/4-3AC	1.110	142	0.430	1465	36.6	N45
SLCS500/2A-3AC	2.930	502	2.980	2840	49.4	N52
SLCS500/2B-3AC	4.190	729	6.330	2895	48.3	N49
SLCS500/4A-3AC	1.970	162	0.740	1430	43.4	N50
SLCS500/4B-3AC	2.390	204	1.150	1470	42.5	N48
SLCS560/4A-3AC	1.850	175	0.680	1435	47.7	N55
SLCS560/4B-3AC	3.280	213	1.390	1465	50.2	N55
SLCS630/4A-3AC	3.710	221	1.640	1430	50.0	N55
SLCS630/4B-3AC	5.210	290	2.850	1465	53.0	N56
SLCS710/4A-3AC	4.870	286	2.790	1390	50.0	N53
SLCS710/4B-3AC	6.930	361	5.140	1410	48.8	N50

Data provided at standard air density of 1.2 kg/m^3.
Values are per ISO 12759 installation category D (total).

Elta Fans Limited has a policy of continuous product development and improvement and therefore reserves the right to supply products which may differ from those illustrated and described in this publication. Confirmation of dimensions and data will be supplied on request.

SmokeVent SLCS

Dimensional Data

AC

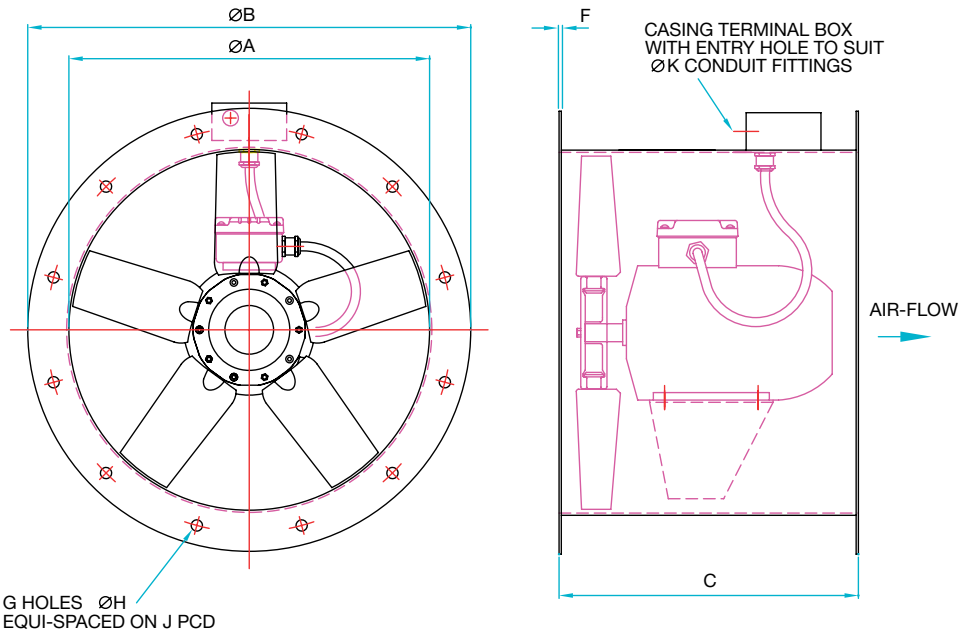

Product Code	Fan Dia. A	B	C	D	F	G	H	J	K	Weight kg
SLCS400/4-3AC	400	475	400	260	3	8	12	450	20	35
SLCS400/2A-3AC										37
SLCS400/2B-3AC										42
SLCS500/4A-3AC	500	585		310		12		560		41
SLCS500/4B-3AC										45
SLCS500/2A-3AC										47
SLCS500/2B-3AC			450						25	68
SLCS560/4A-3AC	560	645	400	340				620	20	43
SLCS560/4B-3AC										49
SLCS630/4A-3AC	630	715		375				690		52
SLCS630/4B-3AC			450							64
SLCS710/4A-3AC	710	795		425		16		770		67
SLCS710/4B-3AC			470						25	111

All dimensions are shown in mm.

Elta Fans Limited has a policy of continuous product development and improvement and therefore reserves the right to supply products which may differ from those illustrated and described in this publication. Confirmation of dimensions and data will be supplied on request.

BUILDING SERVICES

Tel: +44 (0) 1384 275800
Fax: +44 (0) 1384 275810
e-mail: bs@eltafans.co.uk

46 Third Avenue
Pensnett Trading Estate
Kingswinford, West Midlands
DY6 7US, United Kingdom

APPLIED TECHNOLOGY

Tel: +44 (0) 1489 566500
Fax: +44 (0) 1489 566555
e-mail: at@eltafans.co.uk

17 Barnes Wallis Road
Segensworth East Industrial Estate
Fareham, Hampshire
PO15 5ST, United Kingdom

EXPORT

Tel: +44 (0) 1489 566500
Fax: +44 (0) 1489 566555
e-mail: export@eltafans.co.uk

17 Barnes Wallis Road
Segensworth East Industrial Estate
Fareham, Hampshire
PO15 5ST, United Kingdom

www.eltafans.com

BS EN ISO 9001:2008
FM 556465

A member of
HEVAC ASSOCIATION

CIBSE
PATRONS

A member of ELTA GROUP LIMITED