ELTA SELECT

Pedestal Fan HPFA

Product Brochure

t: **01384 275800**
f: **01384 275810**
e: **bs@eltafans.co.uk**
visit: **eltaselect.com**

Pedestal Fan HPFA

Circulating Axial Flow Wall Mounted Fan

circulating

MORE INFORMATION		AC PAGE NO.
Performance, SFP & Electrical Data	1Ph	3
Dimensional Data	All	4

OVERVIEW

The Pedestal Fan HPFA is a floor mounted air circulation fan designed to provide powerful, cool, yet effective positive air movement, thereby improving the environmental conditions in a wide variety of industrial, commercial and residential building services applications.

QUICK FACTS

- ✓ Air volume flow rates up to 3.83 m³/s.
- ✓ Three speed settings.
- ✓ Adjustable height.
- ✓ Suitable for operating temperatures up to +45°C
- ✓ Smooth oscillation through 90° arc.

CASING

The all metal fan casing shall provide a long lasting robust construction. Guards are closely meshed black painted wire with additional radial supports to provide increased stiffness.

IMPELLER

Axial impellers shall be provided with fixed blade angles to meet the required duty.
The fan blades are constructed from high quality aluminium, fully balanced, with epoxy powder coated black finish for aesthetic appearance.

MOTORS

Motors are to be three speed induction, with sealed for life bearings, suitable for operating temperatures up to +45°C.

Supplied with a 2.0 metre power lead.

QUALITY MANAGEMENT

Units are to be designed and manufactured with procedures as defined in BS EN ISO 9001:2008.

TYPICAL APPLICATIONS

- Industrial Warehousing
- Gymnasiums
- Factories
- Marquees and Workshops

Elta Fans Limited has a policy of continuous product development and improvement and therefore reserves the right to supply products which may differ from those illustrated and described in this publication. Confirmation of dimensions and data will be supplied on request.

Pedestal Fan HPFA

Performance, SFP & Electrical Data

SINGLE Phase - 220V to 240V / 50Hz

Product Code	Speed r/min			Duty m^3/s	Motor Electrical Data		dBA @3M
	Low	Mid	High		FLC Amps	Power Watts	
HPFA650	890	-	-	1.83	0.56	130	55
	-	1050	-	2.83	0.62	140	59
	-	-	1380	3.83	0.80	170	68

Accessories & Wiring Data

There are no accessories / wiring diagrams for this product.

Elta Fans Limited has a policy of continuous product development and improvement and therefore reserves the right to supply products which may differ from those illustrated and described in this publication. Confirmation of dimensions and data will be supplied on request.

Pedestal Fan HPFA

Dimensional Data

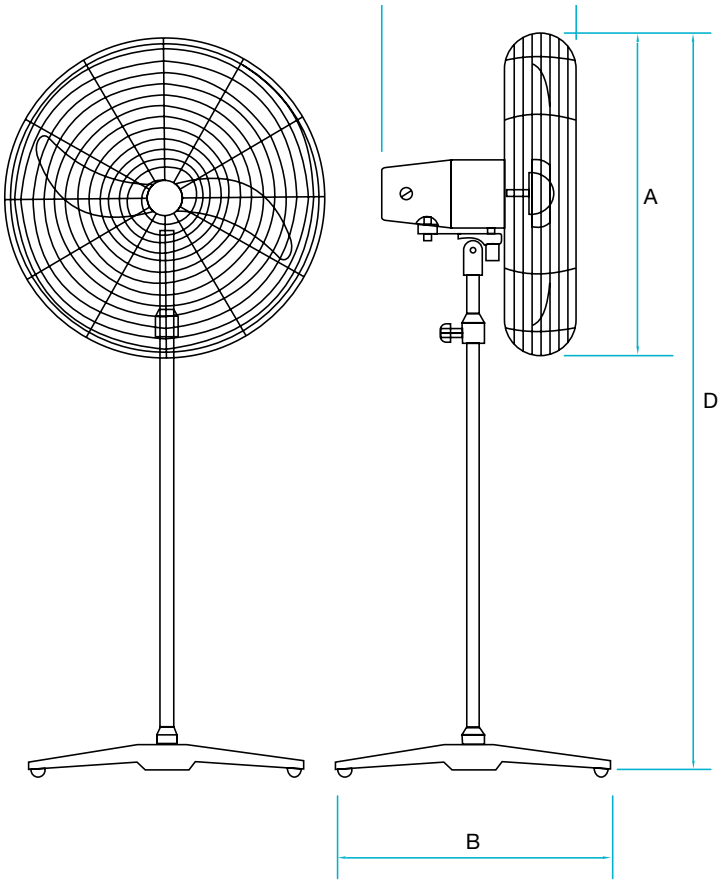

Product Code	A	B	C	D	Weight kg
HPFA650	690	525	360	1460-1860	23.0

All dimensions are shown in mm.

Elta Fans Limited has a policy of continuous product development and improvement and therefore reserves the right to supply products which may differ from those illustrated and described in this publication. Confirmation of dimensions and data will be supplied on request.

BUILDING SERVICES

Tel: +44 (0) 1384 275800
Fax: +44 (0) 1384 275810
e-mail: bs@eltafans.co.uk

46 Third Avenue
Pensnett Trading Estate
Kingswinford, West Midlands
DY6 7US, United Kingdom

APPLIED TECHNOLOGY

Tel: +44 (0) 1489 566500
Fax: +44 (0) 1489 566555
e-mail: at@eltafans.co.uk

17 Barnes Wallis Road
Segensworth East Industrial Estate
Fareham, Hampshire
PO15 5ST, United Kingdom

EXPORT

Tel: +44 (0) 1489 566500
Fax: +44 (0) 1489 566555
e-mail: export@eltafans.co.uk

17 Barnes Wallis Road
Segensworth East Industrial Estate
Fareham, Hampshire
PO15 5ST, United Kingdom

www.eltafans.com

BS EN ISO 9001:2008
FM 556465

A member of
HEVAC ASSOCIATION

CIBSE
PATRONS

A member of ELTA GROUP LIMITED